XYL Large Travel XY Table

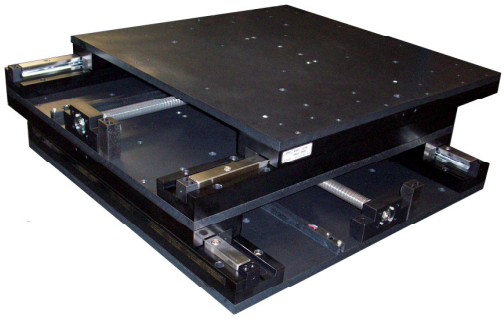

Features

: : 12 - 27" XY travels

: : Low Profile Monolithic

: : High Load Capacity

: : Optional Servo Motor and Linear Encoder

: : Adjustable end of travel limits

Description

The XYL Series utilizes precision crossed roller ways with 22mm tool steel rails and hardened, 9mm diameter rollers for very high stiffness and load capacity. The monolithic design results in a low profile stage.

The XYL Series uses 3/4" diameter leadscrews (larger than in the XY and XYR Series) to move heavier loads. These units include stepper motors, couplings, Hall effect limit sensors, and locking motor and limit/encoder connectors.

The XYL has mount hole patterns on the top plate for use with standard Dover stages.

If the increased accuracy of linear encoders is desired, they are mounted on the side of the stage next to the leadscrews to minimize Abbé error.

Load capacities reflect the amount of force that each stage can withstand. Load distribution and choice of motors, leadscrews, and controls impact the load capacity.

This table's plate and riser design means the lower axis motor is mounted to the base and remains stationary, while the upper axis motor moves with the

Stage Specifications

Base Model	XYL-1515	XYL-2121	XYL-2727	XYL-3030
Travel (in)	12 x 12	18 x 18	24 x 24	27 x 27
Travel (mm)	304 x 304	457 x 457	609 x 609	685 x 685
Positional Accuracy (± µm)[1]	17.5	22.5	30	35
Bi-directional Repeatability (± µm)	3			
Flatness & Straightness (µm TIR)	25	50	75	100
Orthogonality (arc-sec)	50			
Load Capacity (for all, kg)[2]	100	125	150	175
Maximum Leadscrew Velocity (rps)[3]	15			
Moving Mass - Upper Axis (kg)	8.6	15	35	44
Moving Mass - Lower Axis (kg)	32	52	77	96
Total Mass (kg)	42	67	114	141

[1] Stepper motor; open loop. Accuracy improves with encoder feedback or compensation
[2] Please contact our Applications Engineers for loads exceeding the specification
[3] Multiply leadscrew velocity by chosen lead to determine maximum linear velocity

Configurations (Available for all Models)

Leadscrew Lead	0.1 inch Standard, also available with 0.5 in, 0.4 in, 0.2 in, or 2 mm
Motor	200 step / rev Standard, also available with 400 step / rev or Servo
Encoder	Standard option has no encoder, options include: Rotary encoder with 2,000 or 4,000 counts/rev or Linear encoder with 5, 1, 0.5, or 0.1 µm/count

Dover
(800) 227-1066
sales@dovermotion.com
www.dovermotion.com

XYL Large Travel XY Table

Dimensions

Top View

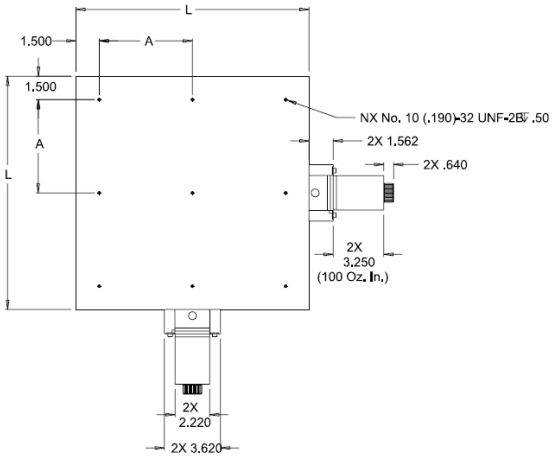

Bottom View

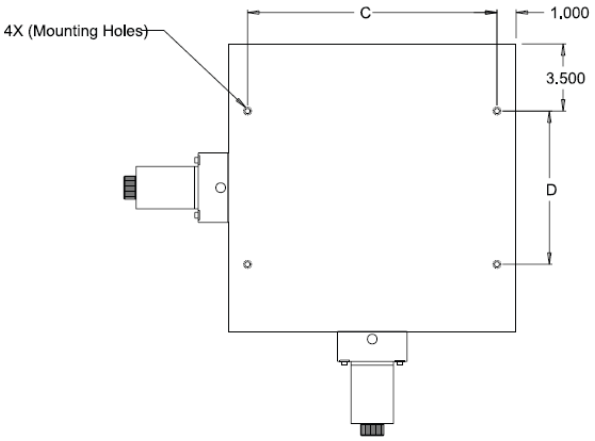

Side View

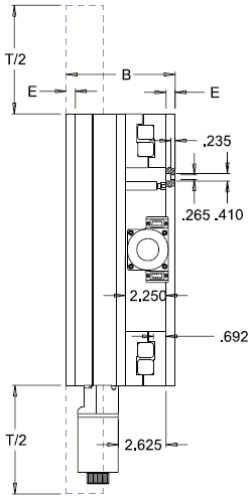

Moving Envelope

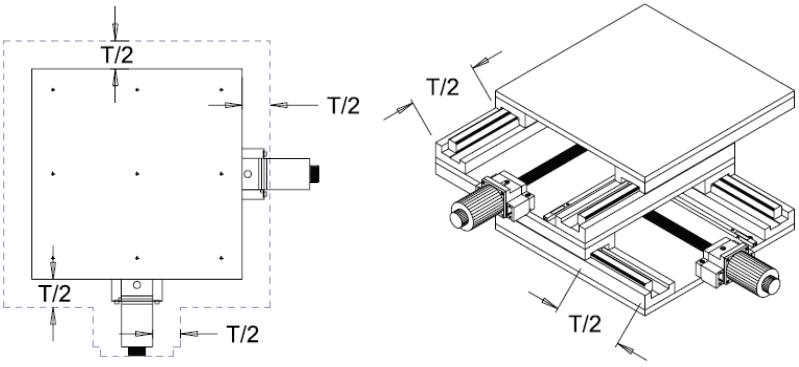

MODEL	TRAVEL T	LENGTH L	A	B	C	D	E	N
XYL-1515-SM	12.00	15.00	6.000	6.000	13.000	8.000	.50	9
XYL-2121-SM	18.00	21.00	6.000	6.000	19.000	14.000	.50	16
XYL-2727-SM	24.00	27.00	6.000	6.500	25.000	20.000	.75	25
XYL-3030-SM	27.00	30.00	9.000	6.500	28.000	23.000	.75	16

Note: All dimensions are in inches.

Wiring Information

Pin	Motor Connector (DE-9P)			Limit/Encoder Connector (DE-9S)
	Stepper	Servo		
		Brushless	Brush	
1	Coil A	Motor Phase 1	Motor +V	+5 Volts
2	Coil $\bar{A}$	Motor phase 2	Not connected	+ Limit Output [1]
3	Not connected	Ground	Not connected	– Limit Output
4	Coil B	Hall input 1	Not connected	Index Output [2]
5	Coil $\bar{B}$	Hall input 2	Not connected	Ground
6	Coil A, center tap	Motor phase 3	Motor -V	Encoder Channel A
7	Not connected	+5 volts	Not connected	Encoder Channel B
8	Not connected	Motor Fault Input	Not connected	Encoder Channel $\bar{A}$
9	Coil B, center tap	Hall input 3	Not connected	Encoder Channel $\bar{B}$

2012-01-03 XYL-Rev-A