RTR™ Crossed Roller Bearing Rotary

DANAHER MOTION

Helping you build a better machine, faster.

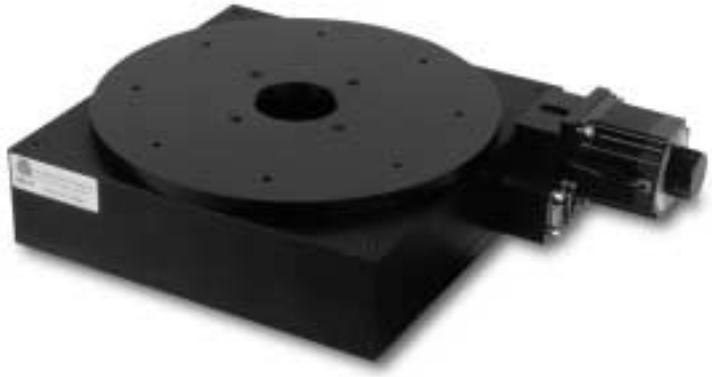

Features

: : High load capacity; high torsional stiffness

: : 4” to 12” diameter versions

: : Anti-backlash worm assembly

Crossed Roller Rotary Tables

The RTR Series of motorized rotary tables provides unlimited angular positioning with a high load capacity. The RTR Series design uses a large crossed roller bearing, which provides high torsional stiffness in addition to its high load capacity. The 6”, 8”, 10”, and 12” diameter versions include a preloaded, anti-backlash worm assembly to provide exceptional angular accuracy and repeatability. A Halleffect limit sensor provides a convenient “home” reference position, accurate to a single step. These units include a motor with a knob and a flexible coupling.

Travel can be restricted by requesting a second position sensor. A clear aperture is available on each model.

SPECIFICATIONS	RTR-4	RTR-6	RTR-8	RTR-10	RTR-12
Diameter (inches)	4	6	8	10	12
Worm/Gear Ratio	90:1 45:1	180:1 36:1	180:1 36:1	180:1	180:1
Resolution[1]	0.002 0.004	0.001 0.005	0.001 0.005	0.001	0.001
Accuracy (degree)			0.05		
Bidirectional Repeatability (degree)	0.01	0.007	0.007	0.005	0.005
Vertical Runout (µm)			<25		
Radial Runout (µm)			20		
Axis Runout (degree)			0.03		
Load Capacity (kg)	15	30	30	45	45
Radial Load Capacity (kg)	3	7	7	12	12
Maximum Speed			15 rps at worm		
Total Mass (kg)	2.3	4.1	6.4	9.1	12.7

CONFIGURATIONS (Apply to all of the above models)[2]				PAGE
Motor Stepper (oz-in)	400 step/rev. 118		others available	194
	200 step/rev. 53	100	others available	

OPTIONS			PAGE
Encoder Rotary (counts/rev.)	2000	4000	136
Clear Aperture			

[1]Resolution assuming ÷10 microstep drive and standard 200 step/rev. stepping motor, or servo motor with 2000 count/rev. rotary encoder.
[2]Standard configuration is highlighted.

Danaher Motion - Dover
800.227.1066 | www.DanaherPrecision.com

DANAHER MOTION

Helping you build a better machine, faster.

RTR™ Crossed Roller Bearing Rotary Table

Top View

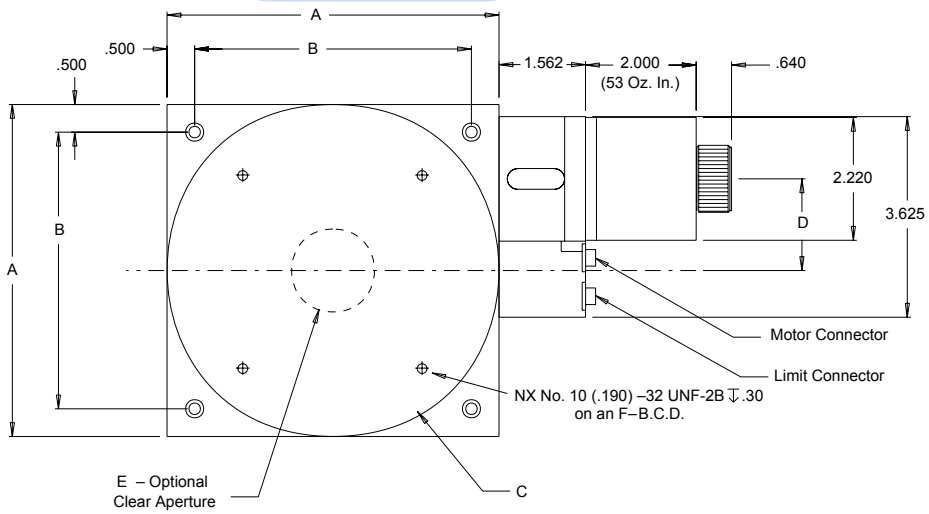

Side View

For RTR-4, RTR-6 & RTR-8

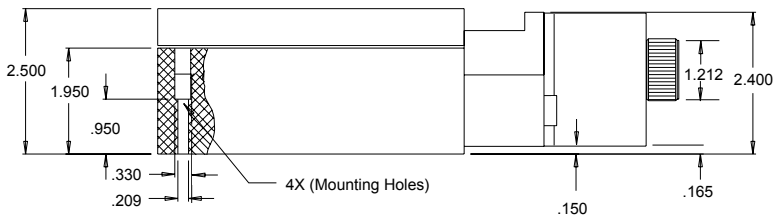

For RTR-10 & RTR-12

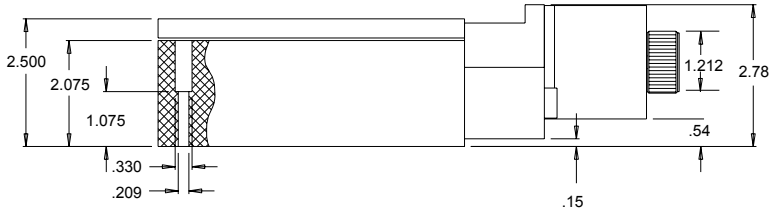

NOTE:
1. Limit will be tripped when the table is moving in a counter clockwise direction.

Third Angle Projection
Note: All Dimensions in Inches

MODEL	A	B	C	D	E	F	N
RTR-4	4	3	4	.953	—	3	4
RTR-6	6	5	6	1.66	1.5	5	4
RTR-8	8	7	8	1.66	1.5	6	8
RTR-10	10	9	10	3.03	3.0	8	8
STR-12	**12**	**11**	**12**	**3.03**	**3.0**	**10**	**8**

Note: All dimensions are in inches.

Danaher Motion - Dover
800.227.1066 | www.DanaherPrecision.com