Inspiring Motion
Since 1988

Gold Oboe
Digital Servo Drive
Installation Guide
EtherCAT and CAN

October 2015 (Ver. 1.001)

www.elmomc.com

Elmo
Motion Control

Notice

This guide is delivered subject to the following conditions and restrictions:

- This guide contains proprietary information belonging to Elmo Motion Control Ltd. Such information is supplied solely for the purpose of assisting users of the Gold Oboe servo drive in its installation.
- The text and graphics included in this manual are for the purpose of illustration and reference only. The specifications on which they are based are subject to change without notice.
- Information in this document is subject to change without notice.

Document no. MAN-G-OBOEIG-EC (Ver. 1.001)
Copyright © 2015
Elmo Motion Control Ltd.
All rights reserved.

Catalog Number and Configurations

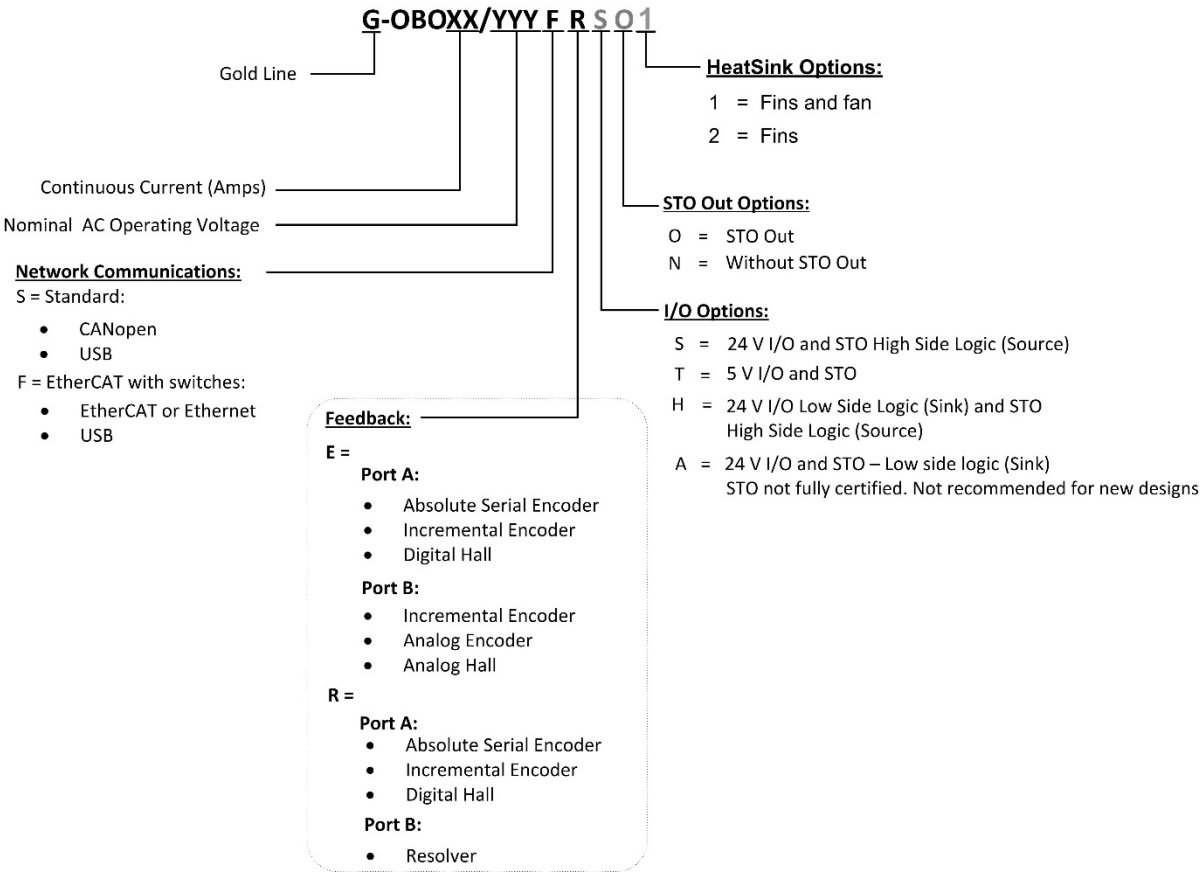

The Gold Oboe is presented in two standard heat-sink configurations:

G-OBOXX/YYYFRSO1
Fins and Fan

G-OBOXX/YYYFRSO2
Fins only

Make sure that the configuration ordered defines your requirements.

Revision History

Version	Date
Ver. 1.000	Aug 2015
Ver. 1.001	Oct 2015

Chapter 1: This Installation Guide 6
Chapter 2: Safety Information 6
2.1 Warnings 7
2.2 Cautions 7
2.3 CE Marking Conformance 7
2.4 Warranty Information 7
Chapter 3: Product Description 8
Chapter 4: Technical Information 9
4.1 Physical Specifications 9
4.2 Technical Data 9
4.3 Auxiliary Supply 10
4.4 Product Features 10
4.5 Environmental Conditions 11
4.5.1 Gold Line 11
4.6 Gold Line Standards 12
Chapter 5: Installation 13
5.1 Hardware Requirements 13
AC Input Requirements 13
Recommended Wire Cross-Sections (All Models) 13
5.2 Unpacking the Drive Components 14
5.3 Connectors Types 15
5.3.1 Mating Connector Types 17
5.4 Mounting the Gold Oboe 18
5.5 Connection Diagrams 19
5.5.1 Connection Diagrams for EtherCAT Version 19
5.5.2 Connection Diagrams for CAN Version 20
Chapter 6: Wiring 21
6.1 Basic Recommendations 23
6.1.1 General 23
6.1.2 Feedback Cable Port A and Port B Connector 24
6.1.3 Feedback Cable Port C Connector 25
6.1.4 IO Cable Connector 25
6.1.5 STO Cable Connector 26
6.2 Motor Power Connector Pinouts 27
6.2.1 Motor Power 28
6.3 Main Power 29
6.3.1 Direct-to-Mains Power Source (Non-Isolated) 30
6.3.1.1 Three-Phase Direct-to-Mains Connection Topology 30
6.3.1.2 Single-Phase Direct-to-Mains Connection Topology 31
6.3.2 Shunt Regulator 31
6.3.3 Shunt Protection 31

6.4 Auxiliary Power 32
6.5 Port A 34
6.5.1 Incremental Encoder 35
6.5.2 Hall Sensor 35
6.5.3 Absolute Serial Type Encoder 36
6.6 Port B 38
6.6.1 Incremental Encoder 39
6.6.2 Interpolated Analog Encoder 40
6.6.3 Resolver 41
6.7 Port C, Analog Input, and STO 42
6.7.1 Port C 44
6.7.2 Analog Input 44
6.7.3 STO 45
6.7.3.1 Source Mode PLC Voltage Level 45
6.7.3.2 TTL Mode TTL Voltage Level 45
6.7.3.3 SINK Mode – PLC Voltage Level 46
6.7.3.4 STO Output 47
6.8 Digital Inputs and Outputs 48
6.8.1 Digital Input and Output TTL Mode 50
6.8.2 Digital Input and Output PLC Source Mode 52
6.8.3 Digital Input and Output Sink Mode 54
6.9 USB 2.0 56
6.10 Drive Status Indicator 57
6.11 EtherCAT Communications Version 58
6.11.1 EtherCAT IN/Ethernet Pinouts 58
6.11.2 EtherCAT OUT Pinouts 59
6.11.3 EtherCAT Wiring 60
6.11.4 EtherCAT Link Indicators 60
6.11.5 EtherCAT Status Indicator 61
6.11.6 EtherCAT Switches 61
6.12 CAN Communications Version 62
6.12.1 CAN Wiring 63

Chapter 7: Gold Oboe Heat Dissipation 64

7.1 Power Dissipation 64
1.1.1. Gold Oboe Thermal Data 64

Chapter 8: Powering Up 65

8.1 Initializing the System 65

Chapter 9: Gold Oboe Dimensions 66

9.1 EtherCAT Version 66
9.2 CAN Version 67

Chapter 1: This Installation Guide

This installation Guide details the technical data, pinouts, and power connectivity of the Gold Oboe. For a comprehensive detailed description of the functions refer to the MAN-G-Panel Mounted Drives Hardware manual which describes Panel Mounted products.

Chapter 2: Safety Information

In order to achieve the optimum, safe operation of the Gold Oboe, it is imperative that you implement the safety procedures included in this installation guide. This information is provided to protect you and to keep your work area safe when operating the Gold Oboe and accompanying equipment.

Please read this chapter carefully before you begin the installation process.

Before you start, ensure that all system components are connected to earth ground. Electrical safety is provided through a low-resistance earth connection.

Only qualified personnel may install, adjust, maintain and repair the servo drive. A qualified person has the knowledge and authorization to perform tasks such as transporting, assembling, installing, commissioning and operating motors.

The Gold Oboe contains electrostatic-sensitive components that can be damaged if handled incorrectly. To prevent any electrostatic damage, avoid contact with highly insulating materials, such as plastic film and synthetic fabrics. Place the product on a conductive surface and ground yourself in order to discharge any possible static electricity build-up.

To avoid any potential hazards that may cause severe personal injury or damage to the product during operation, keep all covers and cabinet doors shut.

The following safety symbols are used in this and all Elmo Motion Control manuals:

Warning:
This information is needed to avoid a safety hazard, which might cause bodily injury or death as a result of incorrect operation.

Caution:
This information is necessary to prevent bodily injury, damage to the product or to other equipment.

Important:
Identifies information that is critical for successful application and understanding of the product.

2.1 Warnings

- To avoid electric arcing and hazards to personnel and electrical contacts, never connect/disconnect the servo drive while the power source is on.
- Power cables can carry a high voltage, even when the motor is not in motion. Disconnect the Gold Oboe from all voltage sources before servicing.
- The high voltage products within the Gold Line range contain grounding conduits for electric current protection. Any disruption to these conduits may cause the instrument to become hot (live) and dangerous.
- After shutting off the power and removing the power source from your equipment, wait at least 1 minute before touching or disconnecting parts of the equipment that are normally loaded with electrical charges (such as capacitors or contacts). Measuring the electrical contact points with a meter, before touching the equipment, is recommended.

2.2 Cautions

- The maximum AC power supply connected to the instrument must comply with the parameters outlined in this guide.
- When connecting the Gold Oboe to an approved isolated 24V auxiliary power supply, connect it through a line that is separated from hazardous live voltages using reinforced or double insulation in accordance with approved safety standards.
- Before switching on the Gold Oboe, verify that all safety precautions have been observed and that the installation procedures in this manual have been followed.
- Make sure that the Safe Torque Off is operational

2.3 CE Marking Conformance

The Gold Oboe is intended for incorporation in a machine or end product. The actual end product must comply with all safety aspects of the relevant requirements of the European Safety of Machinery Directive 2006/42/EC as amended, and with those of the most recent versions of standards EN 60204-1 and EN ISO 12100 at the least, and in accordance with 2006/95/EC.

Concerning electrical equipment designed for use within certain voltage limits, the Gold Oboe meets the provisions outlined in 2006/95/EC. The party responsible for ensuring that the equipment meets the limits required by EMC regulations is the manufacturer of the end product.

2.4 Warranty Information

The products covered in this manual are warranted to be free of defects in material and workmanship and conform to the specifications stated either within this document or in the product catalog description. All Elmo drives are warranted for a period of 12 months from the time of installation, or 12 months from time of shipment, whichever comes first. No other warranties, expressed or implied — and including a warranty of merchantability and fitness for a particular purpose — extend beyond this warranty.

Chapter 3: Product Description

The Gold Oboe series of digital servo drives are highly resilient and designed to deliver the highest density of power and intelligence. The Gold Oboe delivers up to **5.7 kW of nominal power** in a compact package.

The Gold Oboe series are part of Elmo's advanced Gold Line. They operate from an AC power source in current, velocity, position and advanced position modes, in conjunction with a permanent-magnet synchronous brushless motor, DC brush motor, linear motor or voice coil. They are designed for use with any type of sinusoidal and trapezoidal commutation, with vector control. The Gold Oboe can operate as a stand-alone device or as part of a multi-axis system in a distributed configuration on a real-time network.

The drives are easily set up and tuned using Elmo Application Studio software tools. This Windows-based application enables users to quickly and simply configure the servo drive for optimal use with their motor. The Gold Oboe, as part of the Gold Line, is fully programmable with Elmo's motion control language.

Power to the drives is provided by an AC power source, either directly from the mains or via a transformer.

An auxiliary 24 VDC power supply is required as the Gold Oboe does not operate without one. In addition, the Auxiliary 24 VDC also powers the heat cooling fan. This smart fan is activated only "when required", significantly prolonging the fan's life-time. The auxiliary 24 VDC power supply also serves as a backup functionality, for preserving programs and parameters and maintaining communication when either the AC Mains supply is turned off or due to a Mains fault.

Chapter 4: Technical Information

4.1 Physical Specifications

Feature	Units	All Types	
Weight	Kg (oz)	Fins Heat-Sink + Fan	1.10 Kg (36.70 oz)
Dimensions	mm (in)	Fins Heat-Sink	72.3 x 140 x 109 (2.82" x 5.52" x 4.29")
Mounting method		Panel / Wall Mounted	

4.2 Technical Data

Feature	Units	3/230	6/230	10/230	13/230	3/480	6/480	10/480
Minimum supply voltage	VAC DC-500 Hz	1 x 50 or 3 x 50				3 x 140		
Nominal supply voltage	VAC DC-500 Hz	1 x 230 or 3 x 230				3 x 480		
Maximum supply voltage	VAC DC-500 Hz	1 x 270 or 3 x 270				3 x 528		
Maximum continuous power output	kW	0.8	1.6	2.7	3.6	1.7	3.5	5.7
Efficiency at rated power (at nominal conditions)	%	> 98						
Auxiliary supply voltage	VDC	Without Fan: 18 to 30 VDC With Fan: 24VDC± 10%						
Auxiliary supply power	VA	Without Fan: 6 With Fan: 6 (Control) + 10 (for fan) = 16						
Continuous current limit (Ic) Amplitude sinusoidal/DC trapezoidal commutation	A	3	6	10	13	3	6	10
Continuous RMS sinusoidal commutation current limit (Ic)	A	2.1	4.2	7.1	9.2	2.1	4.2	7.1
Peak Current	A	6	12	20	26	6	12	20
Built In Shunt (peak Power)	W	3000				2800		

Note on current ratings: The current ratings of the Gold Oboe are given in units of DC amperes (ratings that are used for trapezoidal commutation or DC motors). The RMS (sinusoidal commutation) value is the DC value divided by 1.41.

4.3 Auxiliary Supply

Feature	Details
Auxiliary power supply	*Isolated DC source only*
Auxiliary supply input voltage	Without Fan: 18 to 30 VDC With Fan: 24VDC± 10%
Auxiliary supply input power	Without Fan: 6 VA With Fan: 16 VA

4.4 Product Features

Main Feature	Details	Presence and No.
STO	TTL *or*	√
	PLC Source *or*	√
	PLC Sink (is not fully certified, and not recommended for new designs)	√
Digital Input Option	TTL *or*	6 (5 with STO output model)
	PLC Source *or*	6 (5 with STO output model)
	PLC Sink	6 (5 with STO output model)
Digital Output Option	TTL *or*	4 (3 with STO output model)
	PLC Source *or*	4 (3 with STO output model)
	PLC Sink	4 (3 with STO output model)
Analog Input	Differential Input	1
Feedback	Standard Port A, B, & C	**√**
Communication Option	USB	**√**
	EtherCAT with switches *or*	**√**
	CAN	**√**
Other	STO Output Status	**√**

4.5 Environmental Conditions

You can guarantee the safe operation of the Gold Oboe by ensuring that it is installed in an appropriate environment.

4.5.1 Gold Line

Feature	Details
Operating ambient temperature according to IEC60068-2-2	0 °C to 40 °C (32 °F to 104 °F)
Storage temperature	-20 °C to +85 °C (-4 °F to +185 °F)
Maximum non-condensing humidity according to IEC60068-2-78	95%
Maximum Operating Altitude	2,000 m (6562 feet) It should be noted that servo drives capable of higher operating altitudes are available on request.
Mechanical Shock according to IEC60068-2-27	15g / 11ms Half Sine
Vibration according to IEC60068-2-6	5 Hz ≤ f ≤ 10 Hz: ±10mm 10 Hz ≤ f ≤ 57 Hz: 4G 57 Hz ≤ f ≤ 500 Hz:5G

4.6 Gold Line Standards

The following table describes the Main Standards of the Gold Oboe servo drive. For further details refer to the MAN-G-Panel Mounted Drives Hardware manual.

Main Standards	Item
The related standards below apply to the performance of the servo drives as stated in the environmental conditions in section 4.5.1 Gold Line above.	
STO IEC 61800-5-2:2007 SIL 3	Adjustable speed electrical power drive systems – Safety requirements – Functional
EN ISO 13849-1:2008 PL e, Cat 3	Safety of machinery — Safety-related parts of control systems.
Approved IEC/EN 61800-5-1	Adjustable speed electrical power drive systems Safety requirements – Electrical, thermal and energy
Recognized UL61800-5-1	Adjustable speed electrical power drive systems Safety requirements – Electrical, thermal and energy
Recognized UL 508C	Power Conversion Equipment
In compliance with UL 840	Insulation Coordination Including Clearances and Creepage Distances for Electrical Equipment
Conformity with CE 2006/95/EC	Low-voltage directive 2006/95/EC
Recognized CSA C22.2 NO. 14-13	Industrial Control Equipment

Chapter 5: Installation

The Gold Oboe must be installed in a suitable environment and properly connected to both its voltage supplies and the motor.

5.1 Hardware Requirements

AC Input Requirements

Circuit Breakers & Contactors	Supply Voltage (VAC)	
	230	480
Circuit breaker current rating	**Single Phase operation:** For 13/230: ≈16A **Three phases operation:** For 13/230: ≈13A Type B	**Three Phase Operation:** For 3/480 : ≈3A For 6/480: ≈6A For 10/480: ≈10A Type B
Circuit breaker voltage rating	240 VAC for 230 type	400 VAC for 480 type
Contactor	Current rating similar to the circuit breaker current ratings	

Recommended Wire Cross-Sections (All Models)

Feature	Connection	Details	
		Recommended Maximum Wire Gauge	Maximum Terminal Capability
AC input	AC1, AC2, AC3	16 AWG	12 AWG
Earth Connection	PE	16 AWG	12 AWG

Note: The actual size is determined by the drive's current model.

5.2 Unpacking the Drive Components

Before you begin working with the Gold Oboe, verify that you have all of its components, as follows:

- The Gold Oboe servo drive
- The Elmo Application Studio (EAS) software and software manual

The Gold Oboe is shipped in a cardboard box with Styrofoam protection.

To unpack the Gold Oboe:

1. Carefully remove the servo drive from the box and the Styrofoam.
2. Check the drive to ensure that there is no visible damage to the instrument. If any damage has occurred, report it immediately to the carrier that delivered your drive.
3. To ensure that the Gold Oboe you have unpacked is the appropriate type for your requirements, locate the part number sticker on the side of the Gold Oboe. It looks like this:

G-OBOE005A

4. Verify that the Gold Oboe type is the one that you ordered, and ensure that the voltage meets your specific requirements.

   The part number at the top provides the type designation. Refer to the appropriate part number in the section Catalog Number at the beginning of the installation guide.

5.3 Connectors Types

The Gold Oboe has the following connectors:

Type	Pins	Function	Port
Front Connectors			
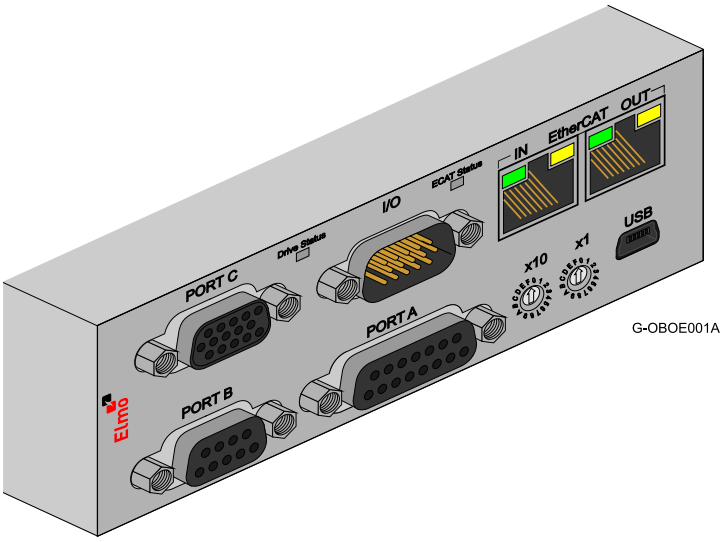 **Front Connectors - EtherCAT**			
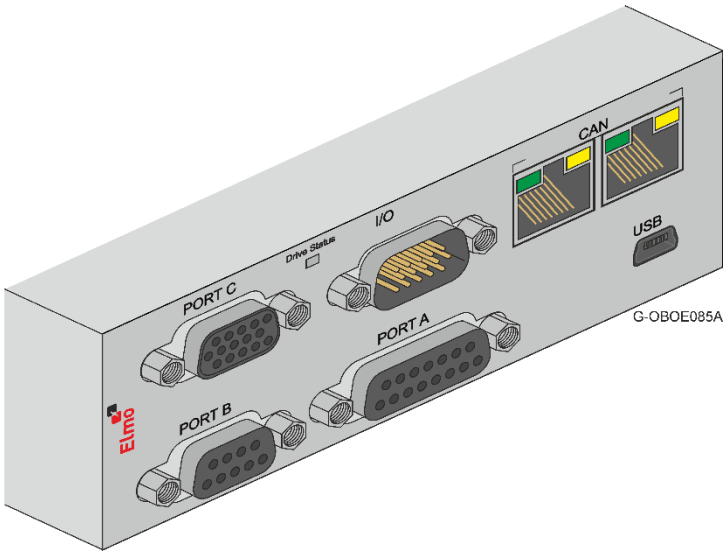 **Front Connectors - CAN**			
RJ-45	8	Ethernet/EtherCAT IN communication	
RJ-45	8	EtherCAT OUT communication	
RJ-45	8	CAN communication	
RJ-45	8	CAN communication	
USB	4	USB communication	USB port
Socket D-Type	15	Feedback	Port A

Type	Pins	Function		Port
15-Pin High Density D-Type Male	15	Digital Input/Digital Output		I/O
Socket D-Type	9	Feedback		Port B
Socket High Density D-Type	15	Feedback Output, Analog Input		Port C
		1	Safe Torque Off Signal Input 1	STO1
		1	Safe Torque Off Signal Input 2	STO2
		2	STO Signal Return	STORET
Power Side Connectors				
		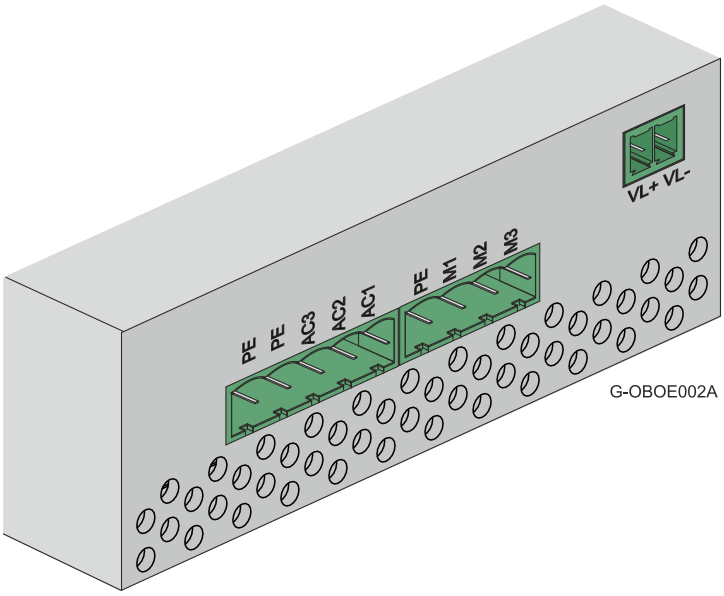		
5 mm pitch	2	Protective Earth		PE
	1	Mains AC Input Phase 1		AC1
	1	Mains AC Input Phase 2		AC2
	1	Mains AC Input Phase 3		AC3
5 mm pitch	1	Motor power output 1		M1
	1	Motor power output 2		M2
	1	Motor power output 3		M3
	1	Protective Earth		PE
3.81 mm pitch	2	VL+ / VL-		24VDC

5.3.1 Mating Connector Types

Mating Pin Connector	Function	Manufacturing P/N (Pheonix)
2 Pin	VL+ / VL-	MC 1,5/2-ST-3,81
5 Pin	AC Input Power	GMSTB 2,5 HCV/ 5-ST-7,62 (1714304)
4 Pin	Motor Power	GMSTB 2,5 HCV/ 4-ST-7,62 (1714294)

5.4 Mounting the Gold Oboe

For optimum heat dissipation, the Gold Oboe should be installed with the heat sink's flat-side attached to the machine's chassis. It is recommended to mount the Gold Oboe in the vertical position.

M4 round head screws, one through each opening in the heat sink, are used to mount the Gold Oboe (see the diagram below).

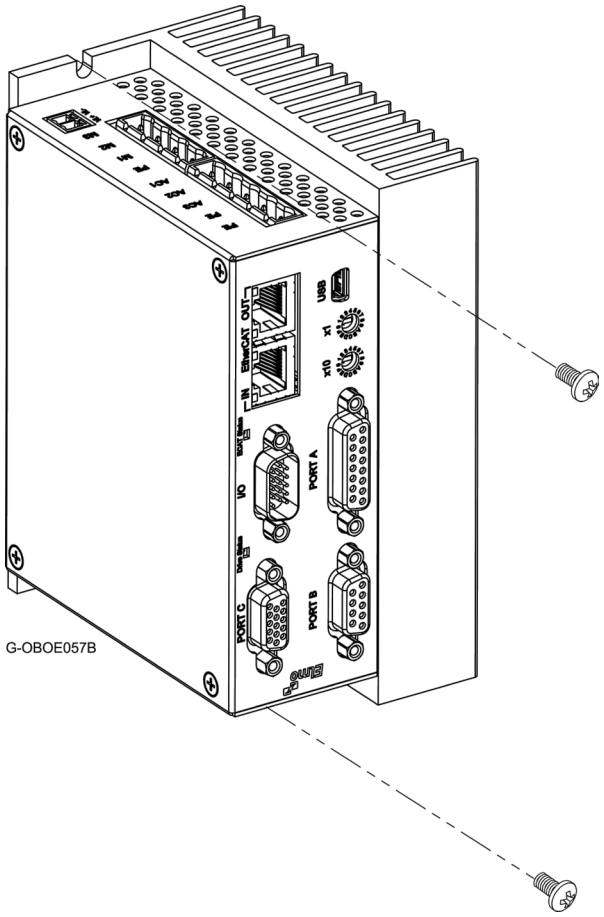

Figure 1: Mounting the Gold Oboe

Note: Whichever mounting method is preferred, make sure to leave 2.54 cm (1 ") from the cooling fan area in any direction for heat dissipation.

5.5 Connection Diagrams

There is one connection diagram for EtherCAT and one for CAN in the Gold Oboe models.

5.5.1 Connection Diagrams for EtherCAT Version

The following describes the connection diagrams for the EtherCAT version.

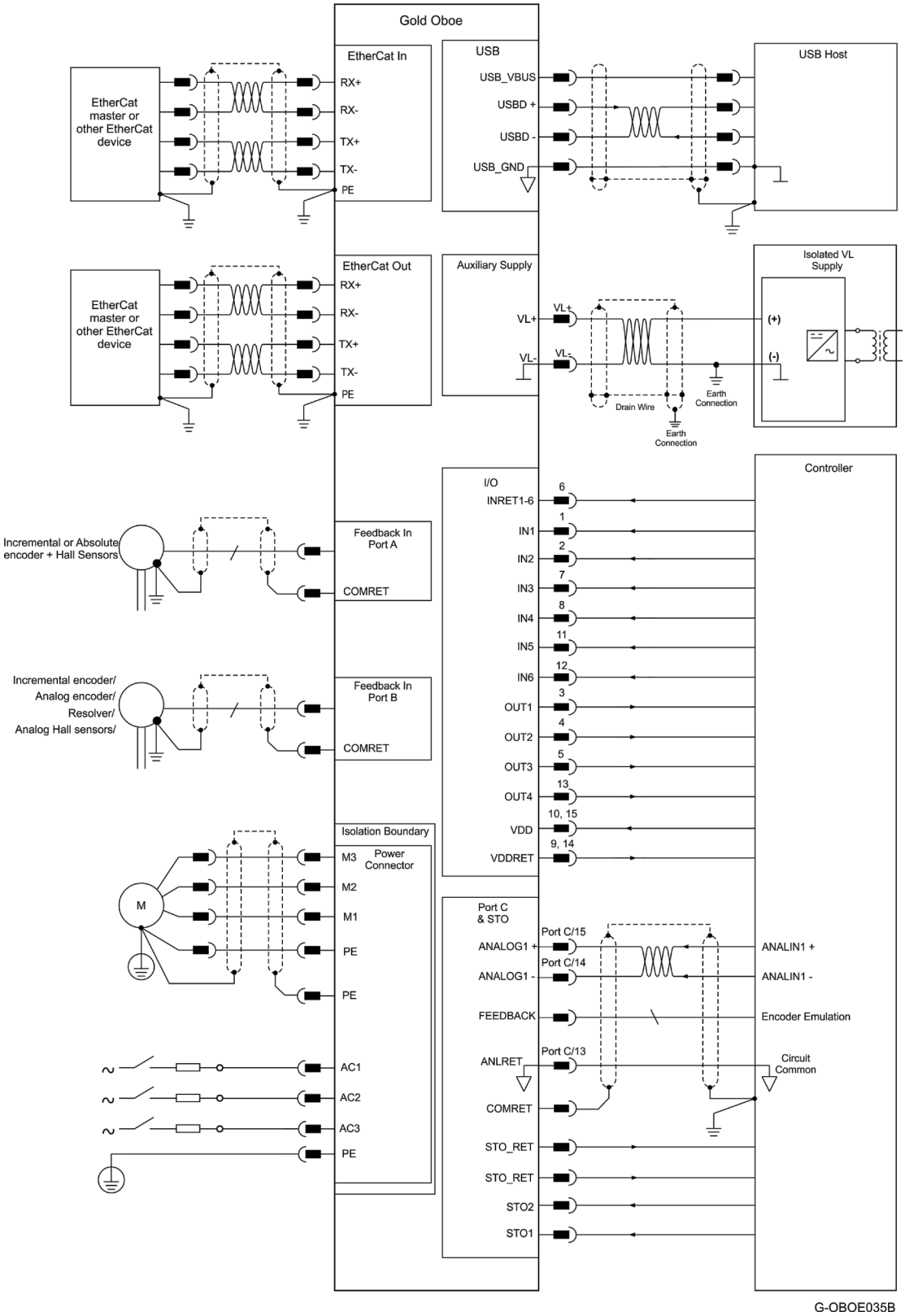

Figure 2: Gold Oboe Connection Diagram for EtherCAT

5.5.2 Connection Diagrams for CAN Version

The following describes the connection diagrams for the CAN version.

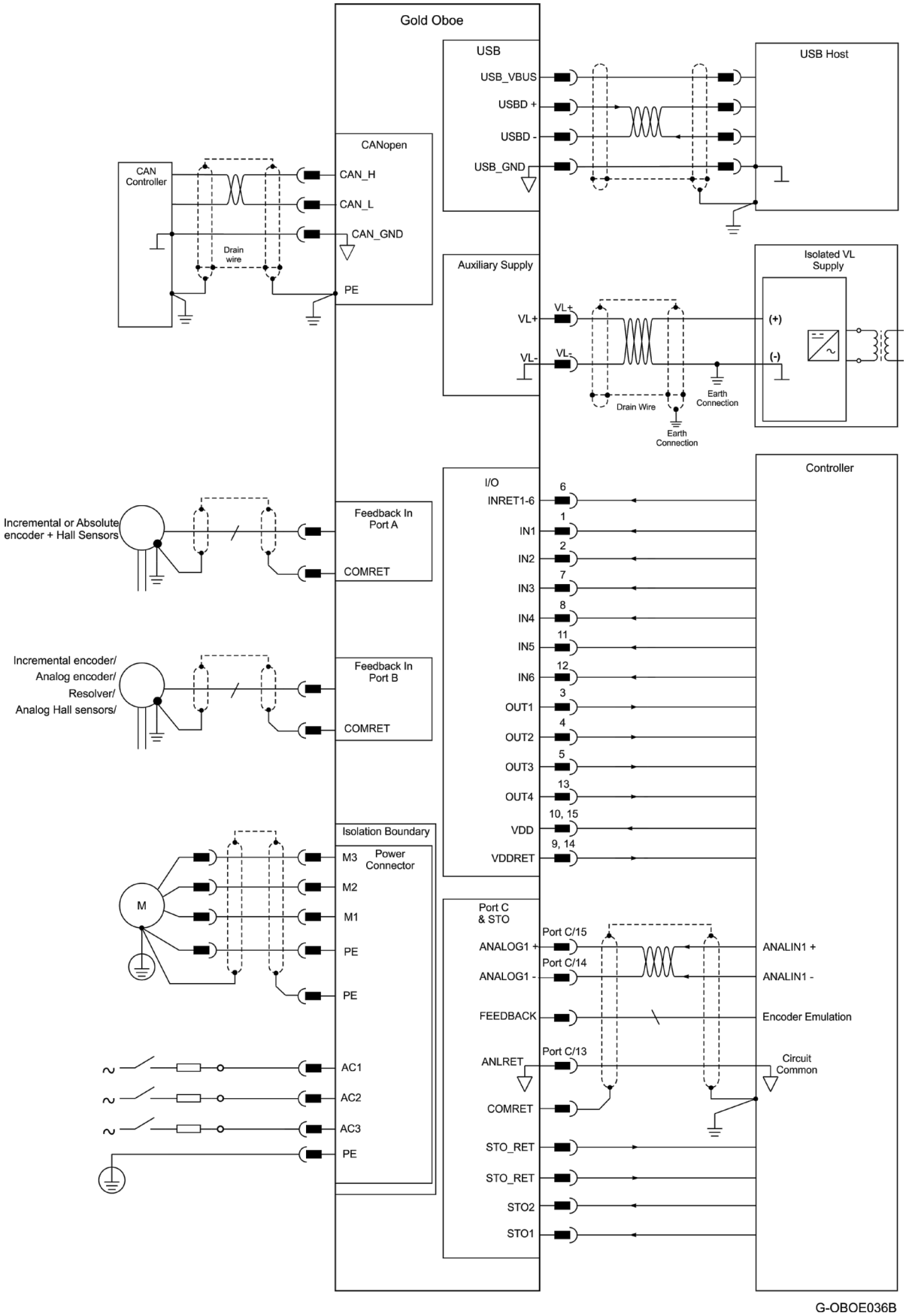

Figure 3: Gold Oboe Connection Diagram for CAN

Chapter 6: Wiring

Once the product is mounted, you are ready to wire the device. Proper wiring, grounding and shielding are essential for ensuring safe, immune and optimal servo performance of the drive.

The following table legend describes the wiring symbols detailed in all installation guides.

Wiring Symbol	Description
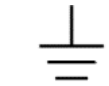 GGEN_101D-A	Earth connection (PE)
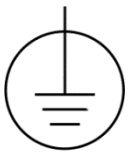 GGEN_101D-B	Protective Earth Connection
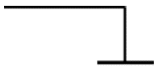 GGEN_101D-C	Common at the Controller
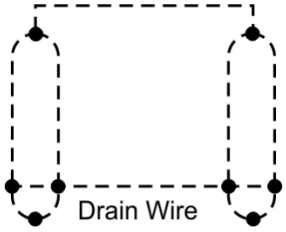 GGEN_101D-D	Shielded cable with drain wire. The drain wire is a non-insulated wire that is in direct contact with the braid (shielding). Shielded cable with drain wire significantly simplifies the wiring and earthing.
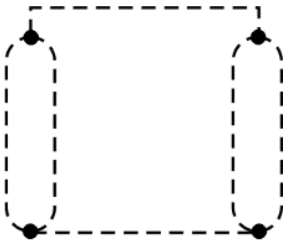 GGEN_101D-E	Shielded cable braid only, without drain wire.
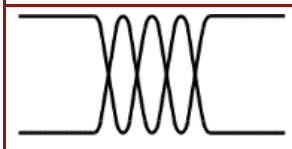 GGEN_101D-F	Twisted-pair wires

Wiring Symbol	Description
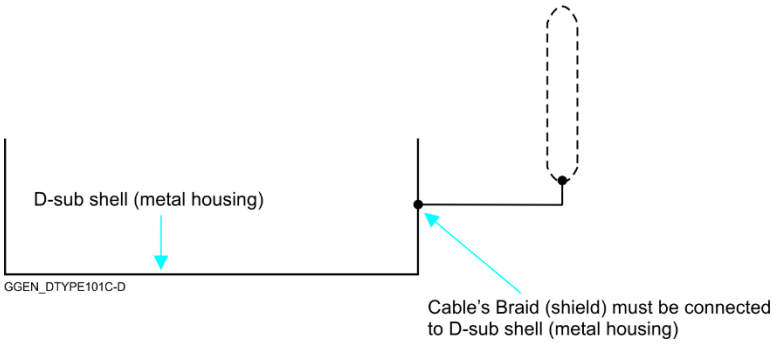	D-type Connector: The cable`s braid (Shield) must be connected to the D-sub shell (metal housing)
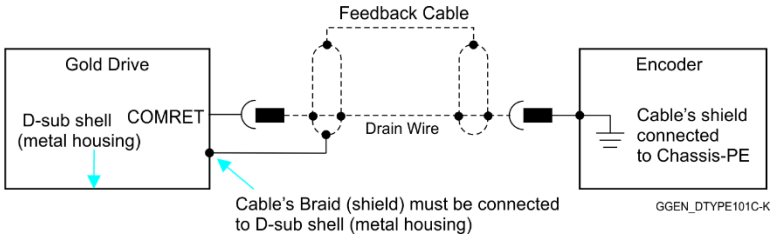	Encoder Earthing. The cable`s shield is connected to the chassis (PE) in the connector. Earthing the Encoder and connecting the Earth (PE) to the drive COMRET is mandatory to insure reliable operation, high noise immunity and rejection of voltage common mode interferences.

6.1 Basic Recommendations

6.1.1 General

1. Use shielded cables. For best results, the cable should have an aluminum foil shield covered by copper braid, and should contain a drain wire.
   Use 24, 26 or 28 AWG twisted-pair shielded with drain wire cables.
2. Keep the cable as short as possible.
   Do not mount the power cables of the motor and power bus in the proximity of the control and feedback cables.
3. Ensure that in normal operating conditions, the “earth connection” wires and shield of the control cables *carry no current.* The only time these conductors carry current is under abnormal conditions, when electrical equipment has become a potential shock or fire hazard while conducting external EMI interferences directly to ground, in order to prevent them from affecting the drive. Failing to meet this requirement might result in drive/controller/host failure.
4. After completing the wiring, carefully inspect all wires to ensure tightness, good solder of joints and general safety.

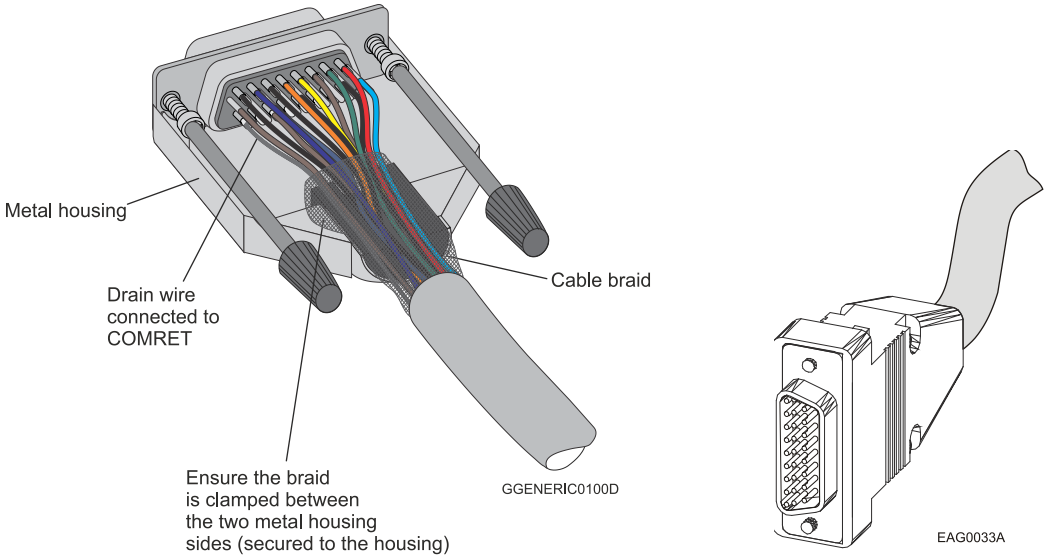

Figure 4: D-Type Cable Assemblies

5. Use only a D-Sub connector with a **metal housing** (Figure 4).
6. Make sure the braid shield is in tight contact with the metal housing of the D-type connector (Figure 4).

6.1.2 Feedback Cable Port A and Port B Connector

1. On the motor side connections, ground the shield to the motor chassis.
2. At least One COMRET (Common Return) must be connected to the PE.

   Implement the following steps to connect the COMRET to the PE:

   a. At the drive, connect the feedback drain wire to one of the COMRET terminals in the D-Type feedback connector (Figure 5).

   b. At the motor, connect the feedback cable drain wire to the GND motor chassis terminal of the feedback connector.

   The drawings below display two earth connections.

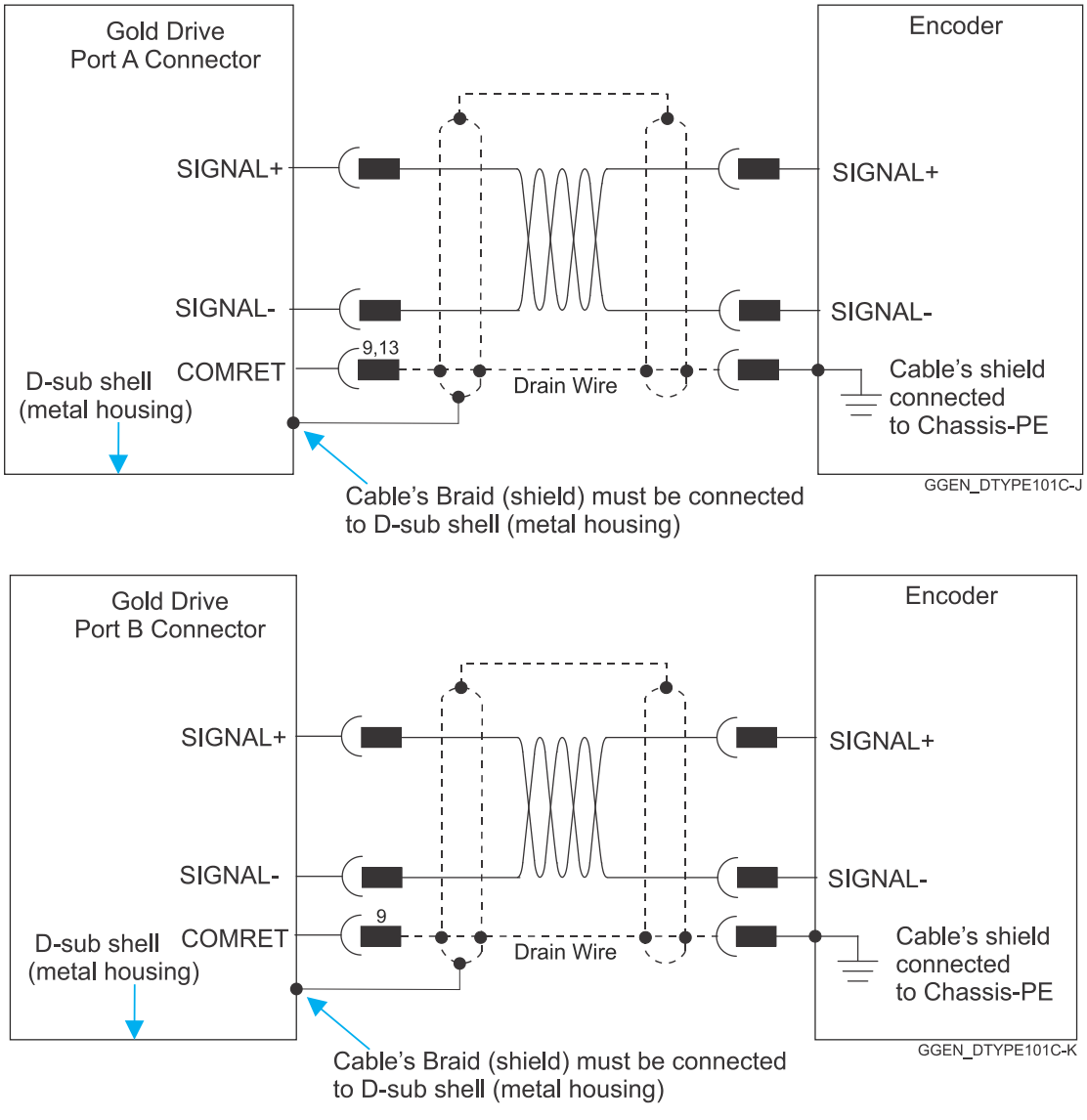

Figure 5: Feedback Port A and B Cable Assemblies

6.1.3 Feedback Cable Port C Connector

1. At the controller side connections, follow the controller manufacturer's recommendations concerning the shield.
2. The connection of the Drain wire to the Port C is mandatory.

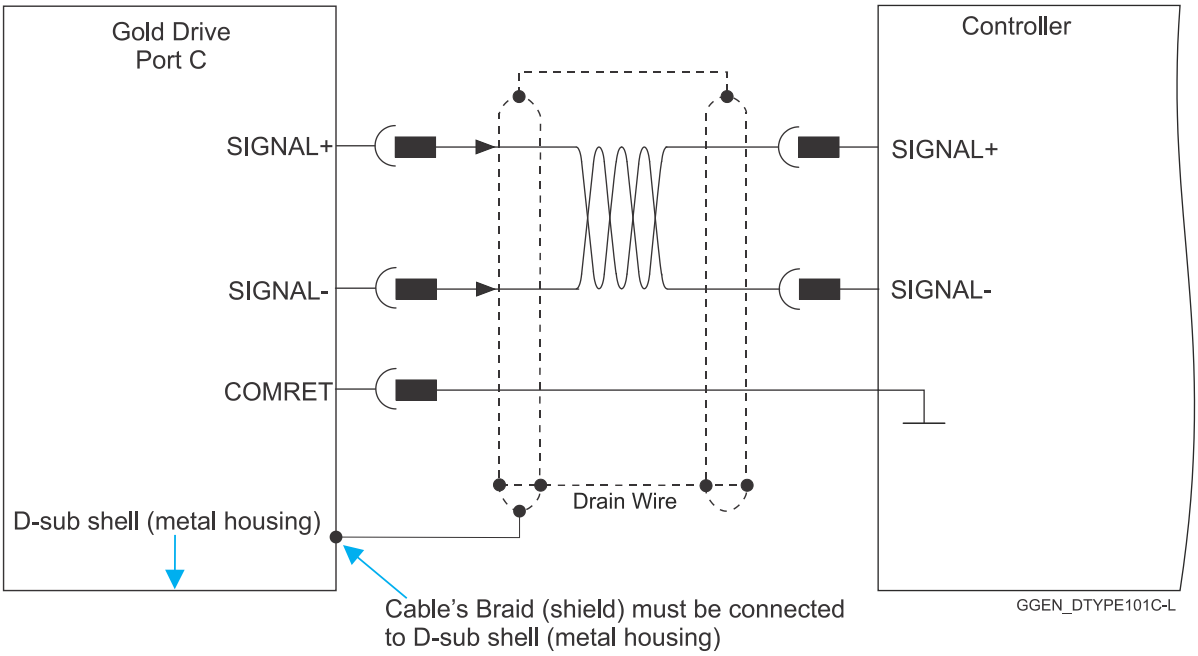

Figure 6: Feedback Port C Cable Assemblies

6.1.4 IO Cable Connector

It is recommended to use shielded cable, but is not mandatory.

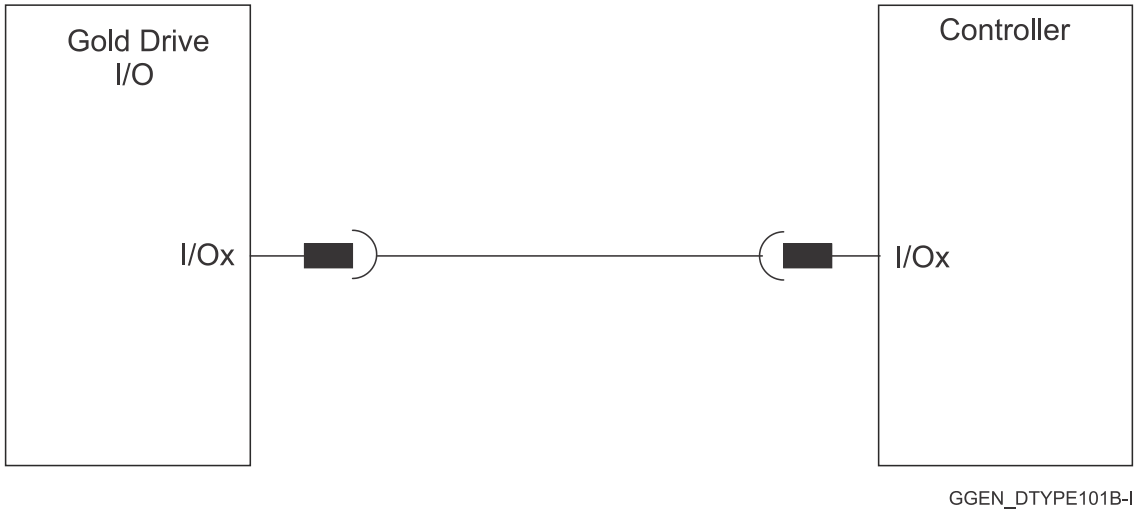

Figure 7: Feedback IO Cable Assemblies

6.1.5 STO Cable Connector

It is recommended to use shielded cable, but is not mandatory.

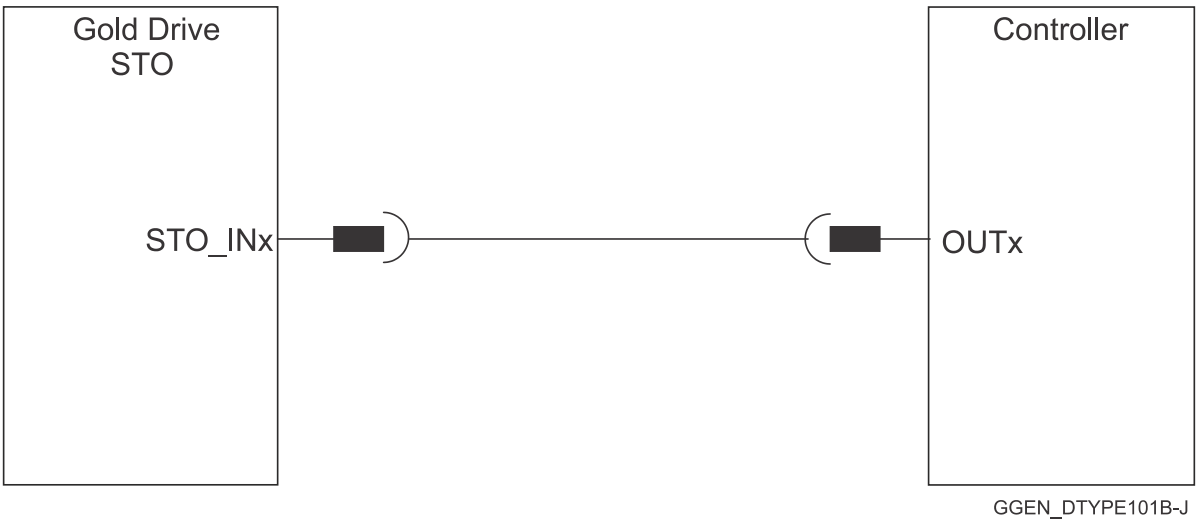

Figure 8: STO Cable Assemblies

6.2 Motor Power Connector Pinouts

See Chapter 8 in the MAN-G-Panel Mounted Drives Hardware manual for full details.

Pin	Function	Cable	
		Brushless Motor	**Brushed DC Motor**
M1	Motor phase M1	Motor	N/C
M2	Motor phase M2	Motor	Motor
M3	Motor phase M3	Motor	Motor
PE	Protective Earth Motor Chassis	Motor Chassis	Motor Chassis
	Protective Earth Motor Chassis	Braid Wire (Recommended but not mandatory)	Braid Wire (Recommended but not mandatory)
Pin Positions			
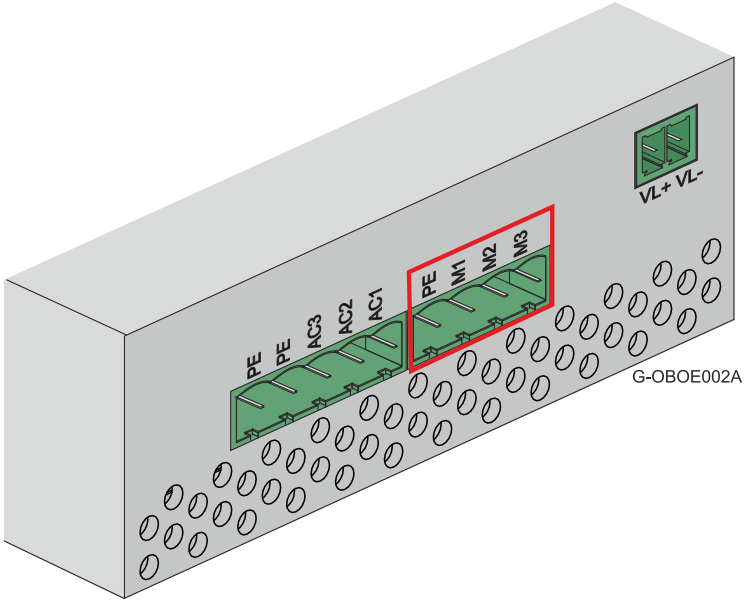 **5-Pin Pluggable 7.62 mm Phoenix Screw Flange Connector**		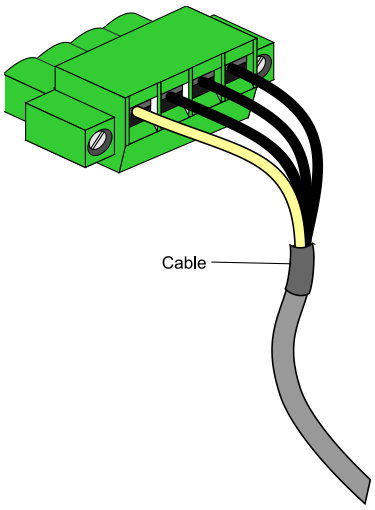	

Table 1: Connector for the Motor

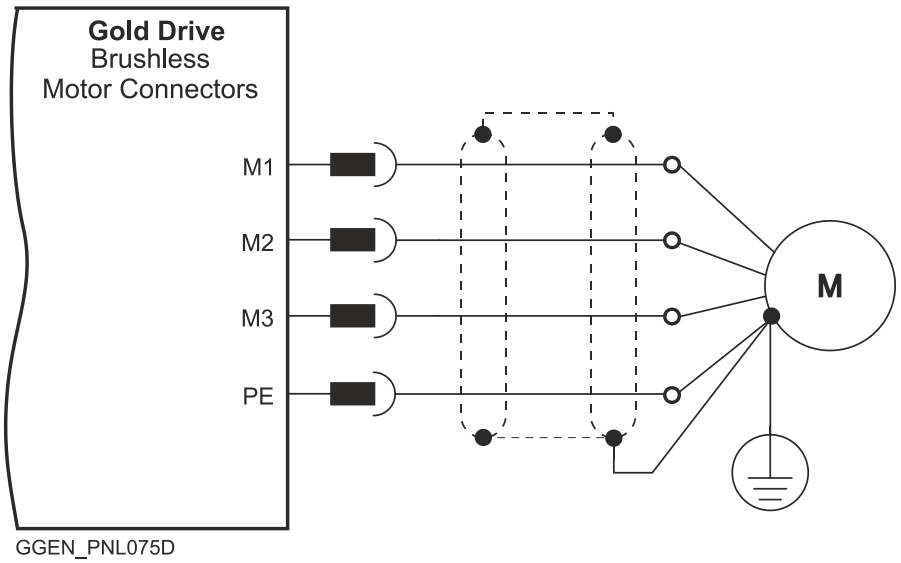

Figure 9: Brushless Motor Power Connection Diagram

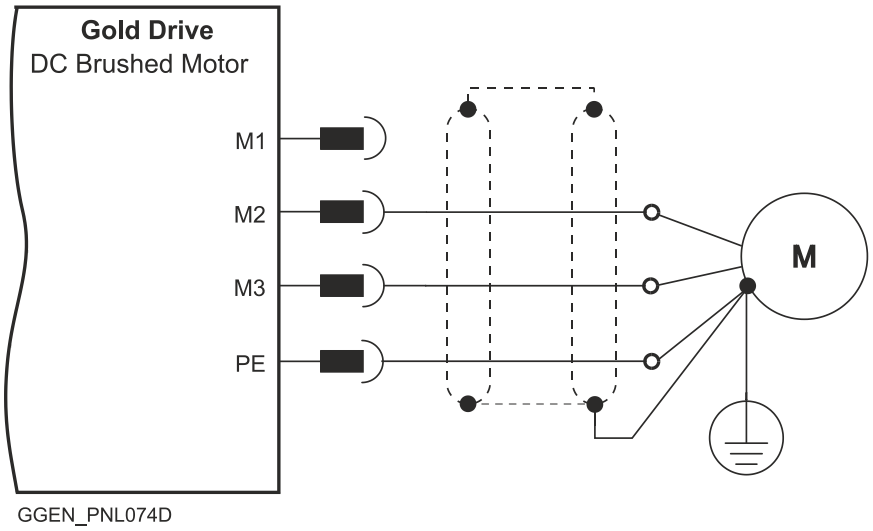

Figure 10: DC Brushed Motor Power Connection Diagram

6.2.1 Motor Power

To power the drive, connect the motor to the drive, and connect the M1, M2, M3, and PE pins on the Gold Oboe. The phase connection is arbitrary as Elmo Application Studio (EASII) will establish the proper commutation automatically during setup. When tuning a number of drives, you can copy the setup file to the other drives and thus avoid tuning each drive separately. In this case the motor-phase order must be the same as on the first drive.

- For best immunity, it is highly recommended to use a 4-wire shielded (not twisted) cable for the motor connection. The gauge is determined by the actual current consumption of the motor.
- Connect the cable shield to the closest ground connection at the motor end.
- For better EMI performance, the shield should be connected to Protective Earth (PE terminal). Connect the Braid wire to the PE terminal on the drive connector.
- Ensure that the motor chassis is properly grounded to PE.

6.3 Main Power

The Gold Oboe receives AC power directly from the mains.

Pin	Function	Cable
PE	Protective Earth	AC Power
PE	Protective Earth	AC Power
AC1	Mains AC input Phase 1	AC Power
AC2	Mains AC input Phase 2	AC Power
AC3	Mains AC input Phase 3	AC Power
Pin Positions		
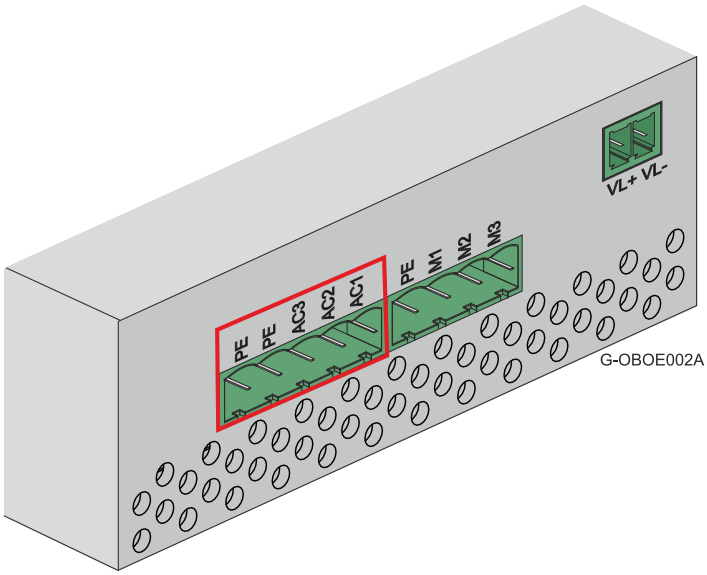 **4-Pin Pluggable 7.62 mm Phoenix Screw Flange Connector**	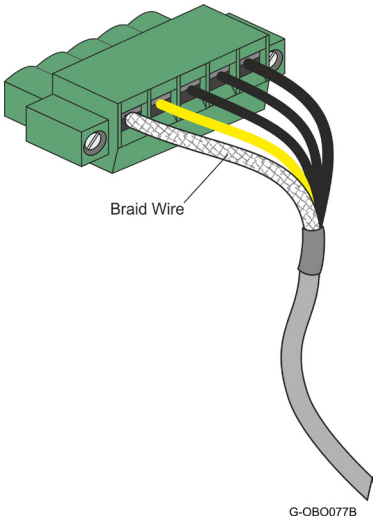	

Table 2: Connector for the Main Power

The AC power for the Gold Oboe can be delivered from either directly from the mains or from a single or three-phase isolated transformer. The following sections contain topology recommendations for implementing three-phase and a single-phase supply chains.

The power stage of the Gold Oboe is fully isolated from the other sections of the Gold Oboe, such as the control-stage and the heat sink. **This isolation allows the user to connect the common of the control section to the PE, a connection which significantly contributes to proper functionality, safety and EMI immunity, leading to better performance of the Gold Oboe.**

This isolation allows the Gold Oboe to operate with a non-isolated source (a direct-to-mains connection) which eliminates the need for a bulky and expensive isolation transformer.

As well as operating from a non-isolated/direct-to-mains AC supply, the Gold Oboe can also operate from an isolated transformer.

The AC voltage level must be limited to 270 VAC in the 230 VAC version, and to 528 VAC in the 480 VAC version, so as not to exceed the maximum allowed supply voltage to the drive.

6.3.1 Direct-to-Mains Power Source (Non-Isolated)

This section relates to the configuration of the drive, which is connected directly to the mains.

To connect the non-isolated AC power supply:

1. For best noise immunity, a shielded (not twisted) cable is recommended (not mandatory) for the AC input cable.
2. A 4-wire shielded cable should be used:
   a. Connect the 3-phase leads of the main input cable to the AC1, AC2 and AC3 terminals of the main input connector.
   b. For safety requirements, the green/yellow-wire must be connected to the protective earth (PE terminal). Connect the Protective Earth wire to the PE terminal on the main AC connector.
   c. For better EMI performance, the shield should be connected to Protective Earth (PE).
3. The gauge of the cable strands is determined by the actual current of the drive.

Caution For all the following Topologies:

Take care and note that in a direct-to-mains connection the Neutral point is *not* the most negative voltage level. It is the mid-point level of the rectified DC bus.

6.3.1.1 Three-Phase Direct-to-Mains Connection Topology

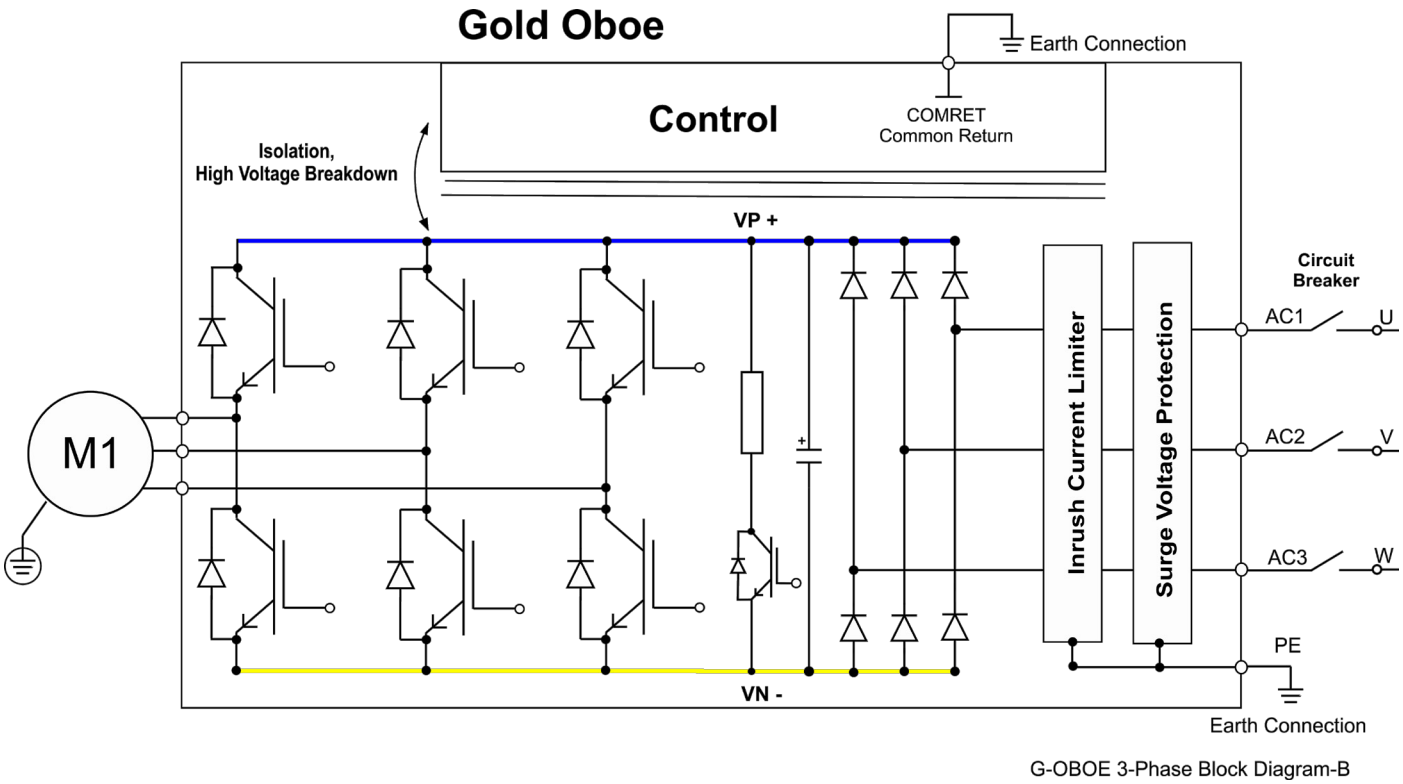

Figure 11: Non-Isolated Three-Phase Source - Connection Topology

6.3.1.2 Single-Phase Direct-to-Mains Connection Topology

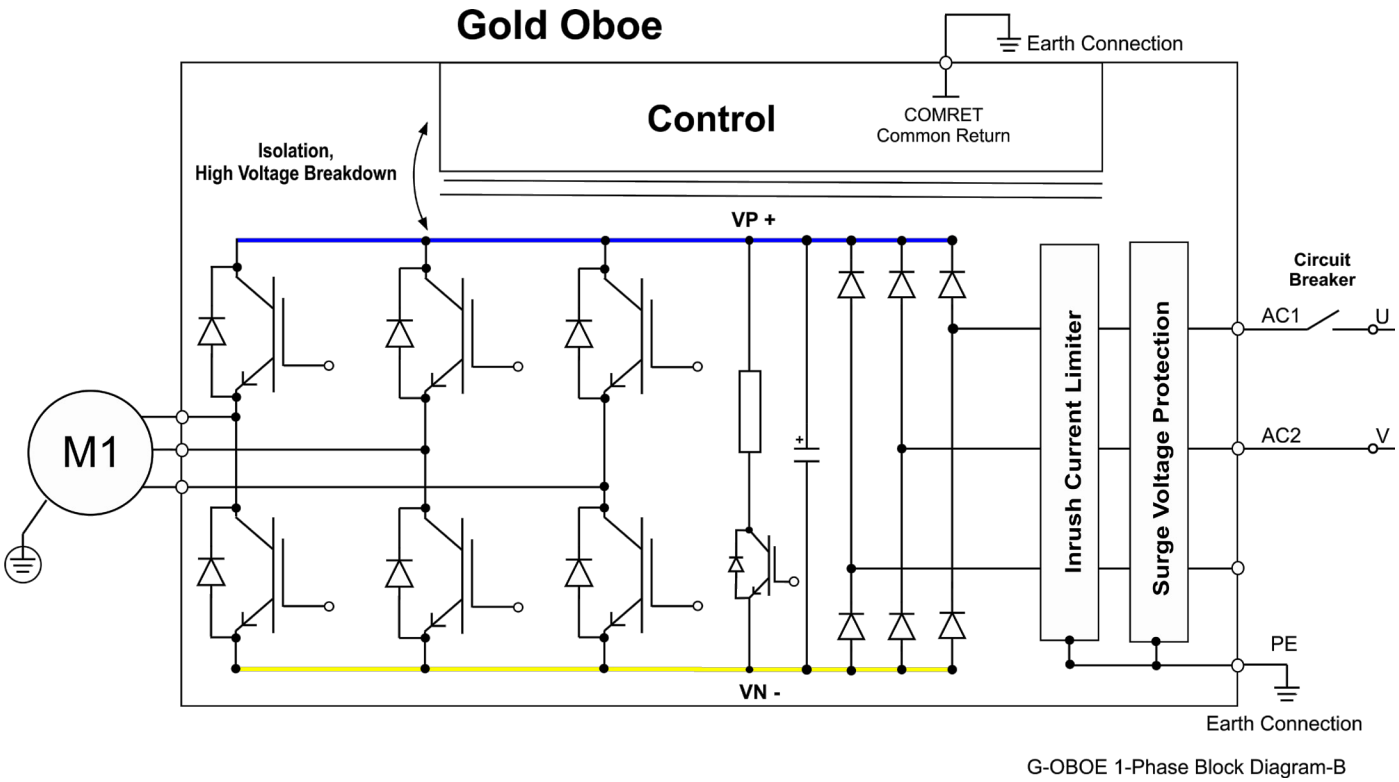

Figure 12: Non-Isolated Single-Phase Source - Connection Topology

6.3.2 Shunt Regulator

A shunt regulator is included in the Gold Oboe. The shunt regulator is a switching type, wherein the dissipative element (power resistor) is switched across the DC bus, whenever the voltage reaches a predetermined level. The function of the shunt regulator is to regulate the voltage of the DC bus during the period of motor deceleration, when there is a net energy outflow from the motor to the servo drive, to prevent the servo drive from disabling itself as a result of an “over-voltage” type reason.

When the capacitors charge-up reaches the predetermined shunt threshold level, the shunt regulator begins its regulating action. The bus is regulated to 385 VDC, or 750 VDC until the regeneration-energy is dissipated.

6.3.3 Shunt Protection

The shunt system of the Gold Oboe includes a duty cycle limiter, which inhibits shunt whenever the shunt ON time exceeds 2% of the complete motion profile time. This feature protects the shunt regulator when high-inertia loads are driven by the servo drive(s) or when too high AC voltage is applied to the power supply (i.e. DC output is already above the threshold of the shunt).

6.4 Auxiliary Power

The Gold Oboe always requires an external 24 VDC power supply, regardless of whether or not backup functionality is required.

Pin	Function	Cable
VL+	+24 V Auxiliary Supply Input Positive	Auxiliary Power
VL-	24 V RET Auxiliary Supply Input Return	Auxiliary Power
Pin Positions		
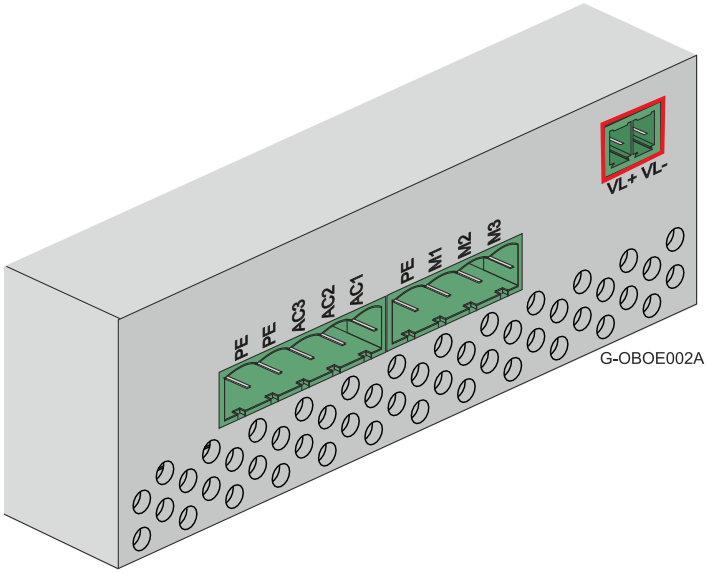 **2-Pin Pluggable 3.81 mm Phoenix Screw Flange Connector**	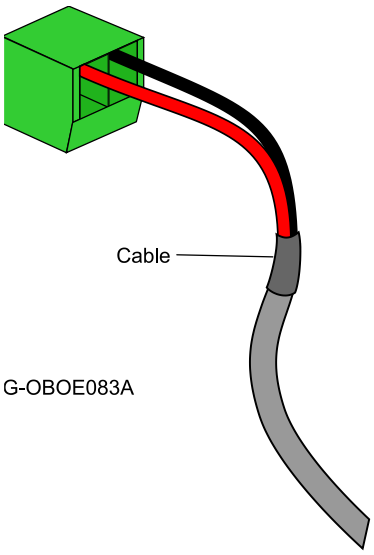	

Table 3: Auxiliary 24 VDC Power Supply Pins and Polarity

Connect the auxiliary 24 VDC power supply as described below.

To connect the 24 VDC power supply:

1. Use a 24 AWG twisted pair shielded cable. The shield should have copper braid.
2. The source of the 24 VDC power supply must be isolated from the mains.
3. For safety and EMI reasons, connect the return of the 24 VDC power supply to the closest ground (PE) in the power supply side.
4. Connect the cable shield to the closest ground (PE) near the power source.
5. Before applying power, first verify that the polarity of the connection is correct.

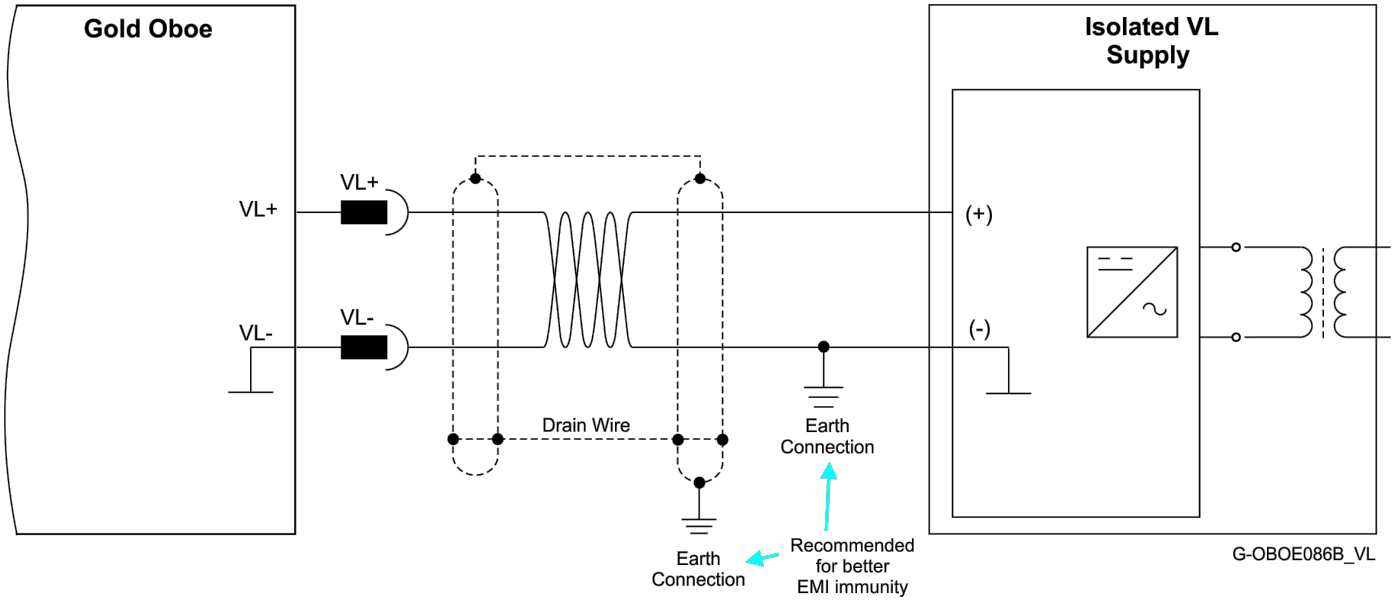

Figure 13: Auxiliary 24 VDC Power Supply Connection Diagram

6.5 Port A

See Section 10.3 in the MAN-G-Panel Mounted Drives Hardware manual for full details.

	Incremental Encoder		Absolute Serial Encoder	
Pin on Port A	**Signal**	**Function**	**Signal**	**Function**
12, 4	+5V	Encoder +5V supply	+5V	Encoder +5V supply
3,9,11,13	COMRET	Common Return	COMRET	Common Return
6	PortA_ENC_A+	Channel A+	ABS_CLK+	Abs encoder clock +
5	PortA_ENC_A-	Channel A-	ABS_CLK-	Abs encoder clock -
15	PortA_ENC_B+	Channel B+	ABS_DATA+	Abs encoder data +
14	PortA_ENC_B-	Channel B-	ABS_DATA-	Abs encoder data -
8	PortA_ENC_INDEX+	Index+	Reserved	Reserved
7	PortA_ENC_INDEX-	Index-	Reserved	Reserved
2	HA	Hall sensor A	HA	Hall sensor A
10	HB	Hall sensor B	HB	Hall sensor B
1	HC	Hall sensor C	HC	Hall sensor C
Pin Positions				

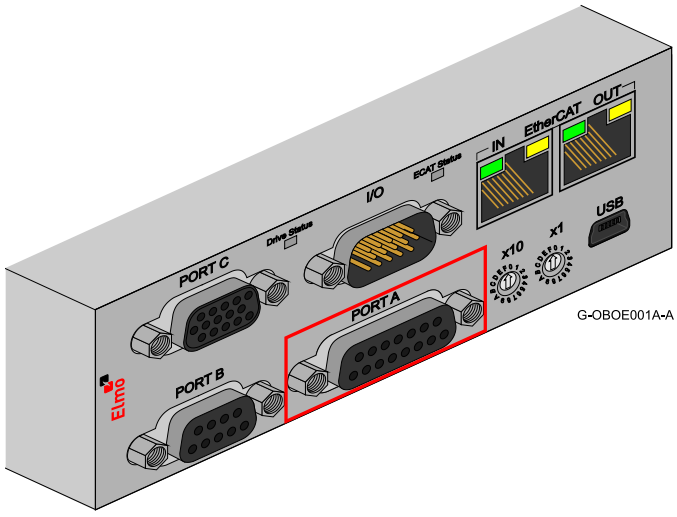

15-Socket D-Type Connector

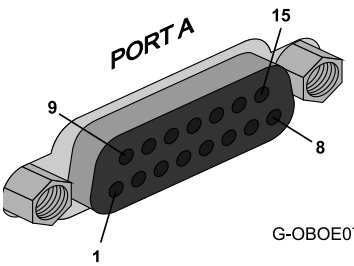

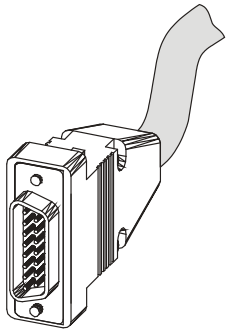

15-Pin D-Type Male Connector

Table 4: Port A Pin Assignments

6.5.1 Incremental Encoder

The following figure describes the connections at Port A for the Incremental encoder.

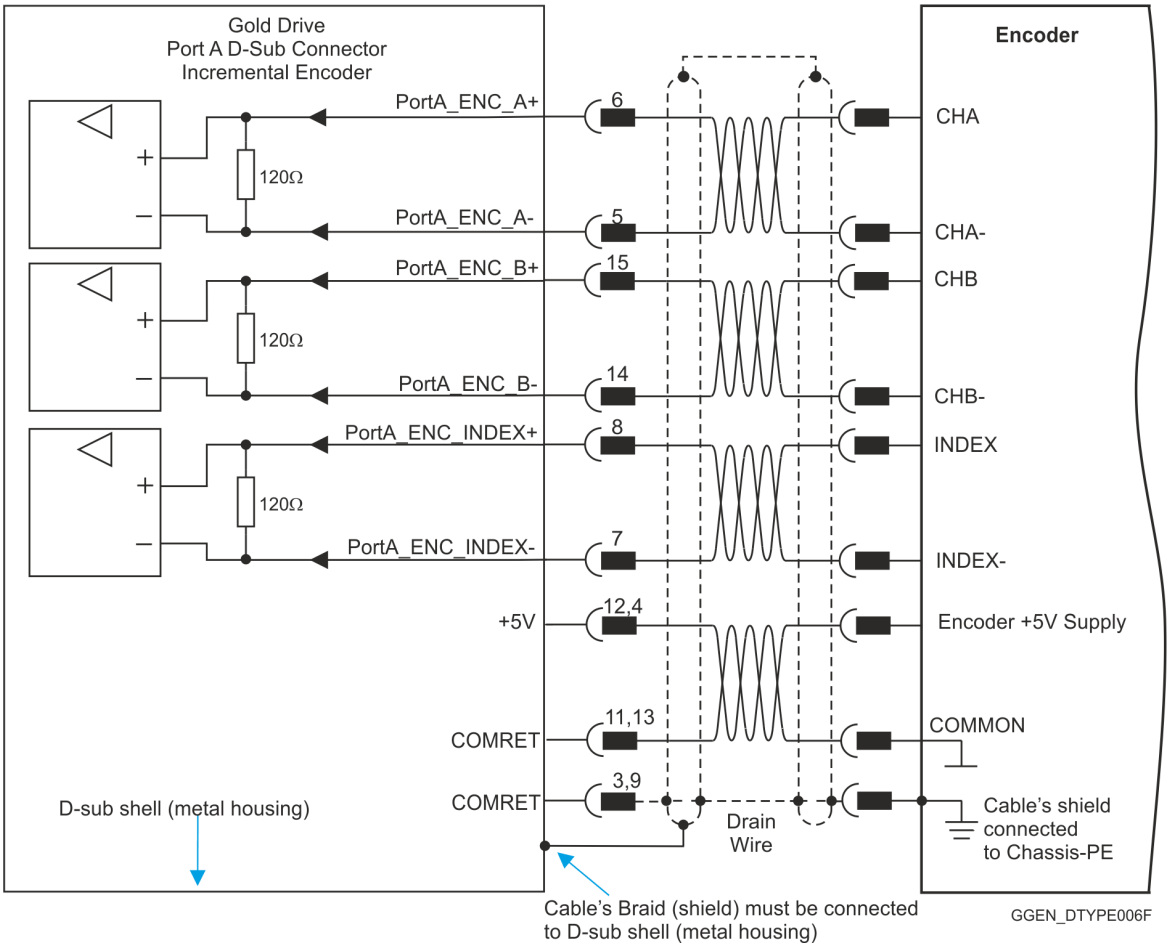

Figure 14: Port A D-Type Incremental Encoder Input – Recommended Connection Diagram

6.5.2 Hall Sensor

The following figure describes the connections at Port A for the Hall Sensor.

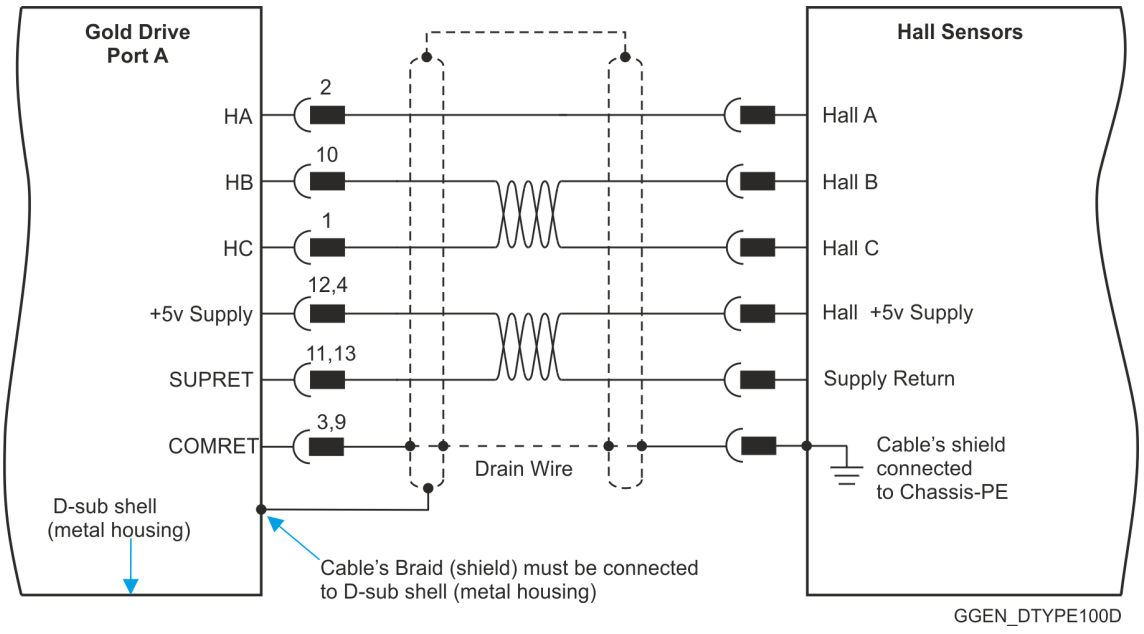

Figure 15: Hall Sensor Connection Diagram

6.5.3 Absolute Serial Type Encoder

The following figures describe the connections at Port A for the Absolute Serial type encoders.

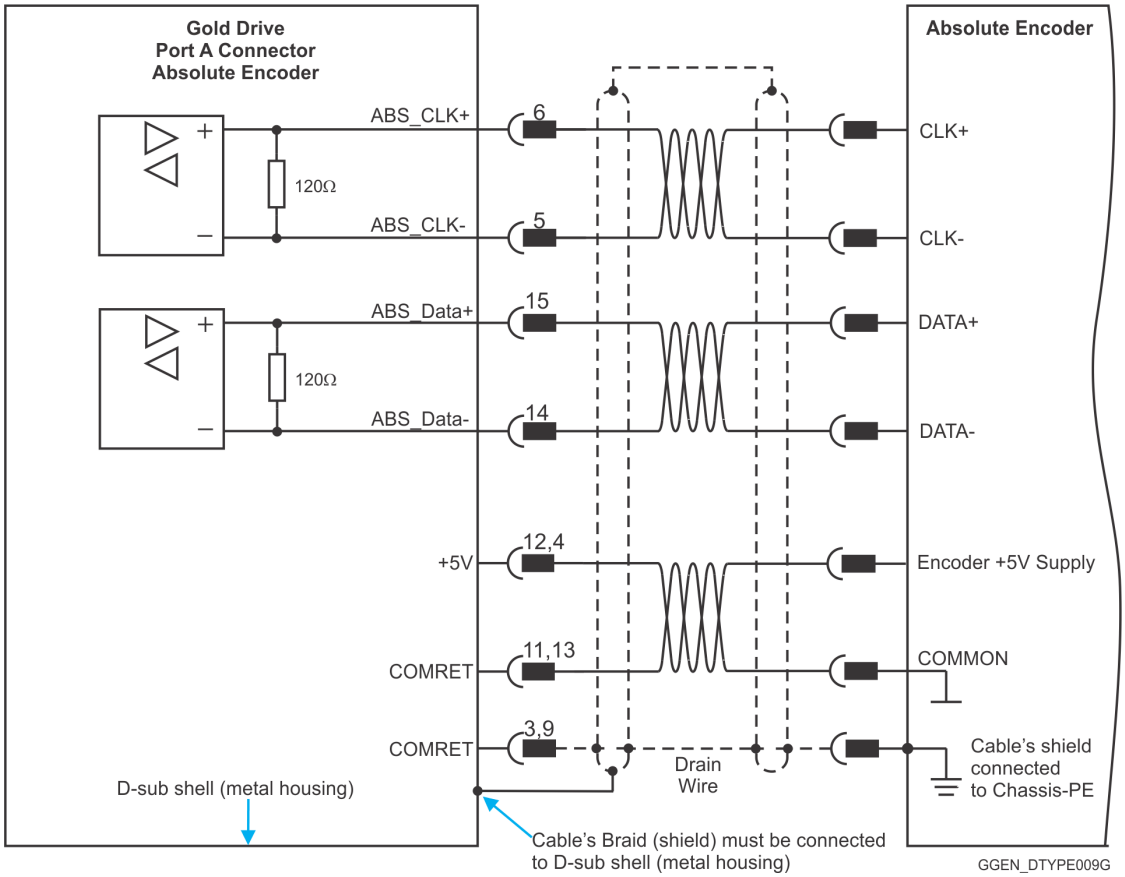

Figure 16: Absolute Serial Encoder – Recommended D-Type Connection Diagram for EnDAT, Biss, and SSI

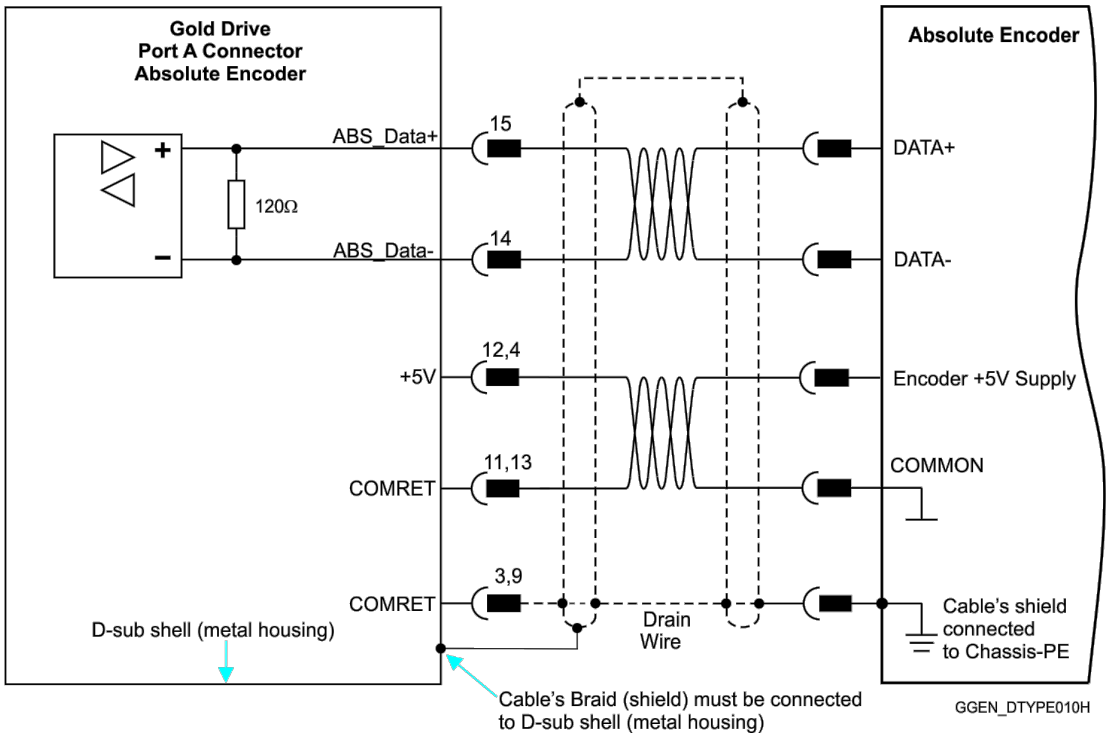

Figure 17: Absolute Serial Encoder – Recommended D-Type Connection Diagram for Sensors Supporting Data Line Only (NRZ types, e.g., Panasonic / Mitutoyo / Sanyo Danki / Tamagawa)

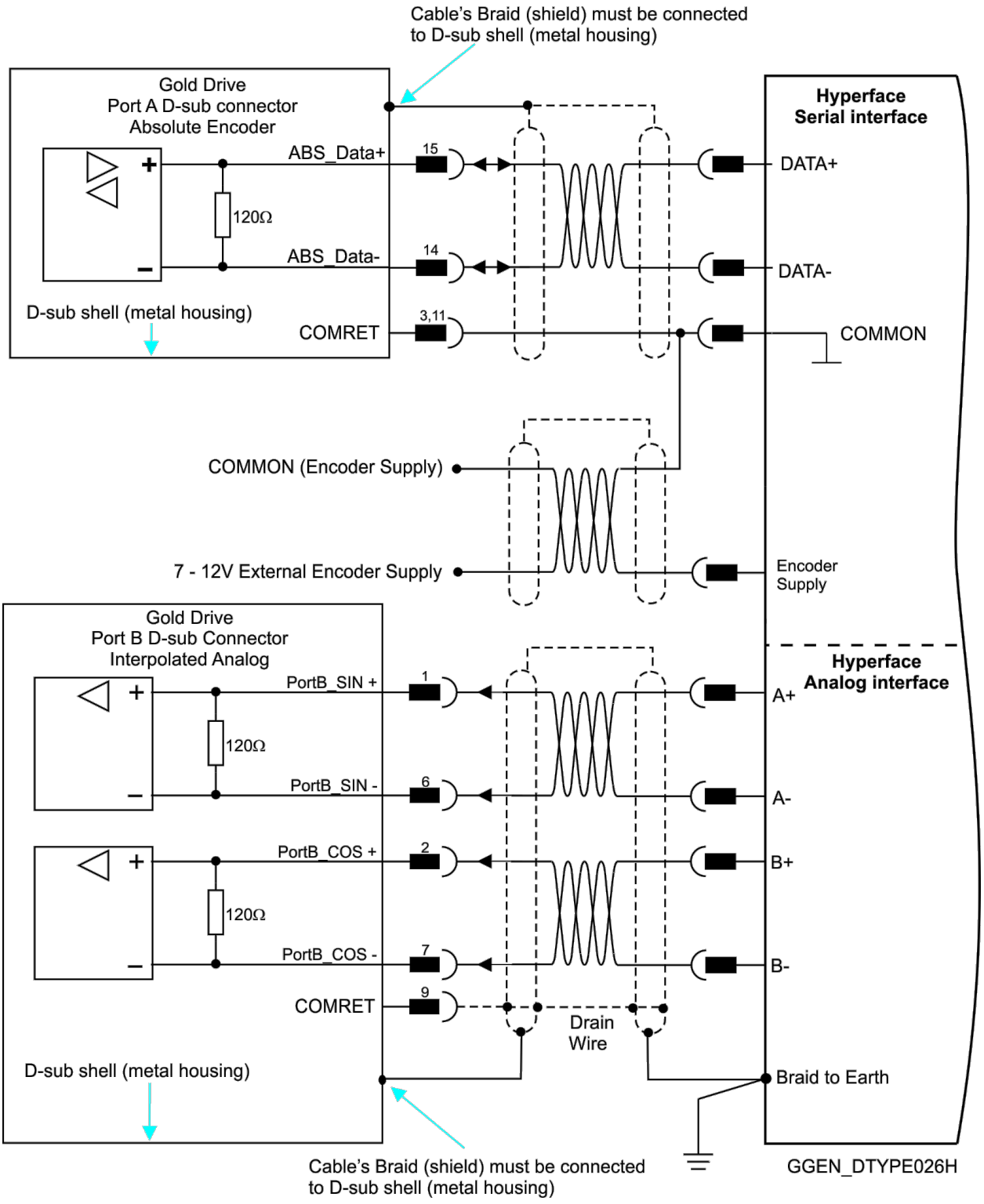

Figure 18: Absolute Serial Encoder – Recommended D-Type Connection Diagram for Stegmann Hiperface

6.6 Port B

See Section 10.4 in the MAN-G-Panel Mounted Drives Hardware manual for full details.

	Incremental or Interpolated Analog Encoder		Resolver	
	G-OBOXX/YYYXEXXX		G-OBOXX/YYYXRXXX	
Pin on Port B	Signal	Function	Signal	Function
4	+5V	Encoder +5V supply	NC	NC
5, 9	COMRET	Common Return	COMRET	Common Return
1	PortB_ENC_A+/SIN+	Channel A+ / Sine+	SIN+	Sine+
6	PortB_ENC_A-/SIN-	Channel A- / Sine-	SIN-	Sine-
2	PortB_ENC_B+/COS+	Channel B+ / Cosine+	COS+	Cosine+
7	PortB_ENC_B-/COS-	Channel B- / Cosine-	COS-	Cosine-
3	PortB_ENC_INDEX+	Index+	RESOLVER_OUT+	Vref f=1/TS, 50 mA Max.
8	PortB_ENC_INDEX-	Index -	RESOLVER_OUT-	Vref complement f= 1/TS, 50 mA Max.
Pin Positions				

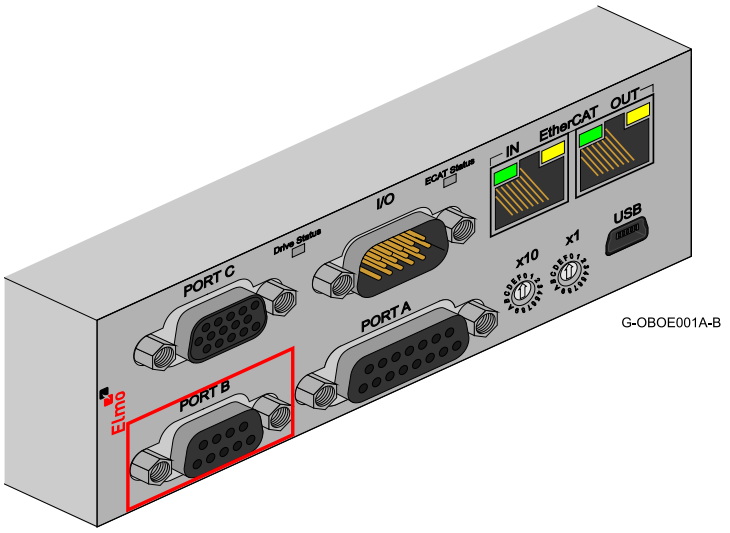

9-Socket D-Type Connector

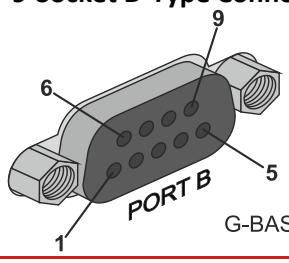

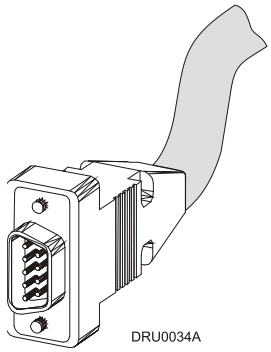

9-Pin D-Type Male Connector

Table 5: Port B Pin Assignments

6.6.1 Incremental Encoder

The following figure describes the connections at Port B for the Incremental encoder.

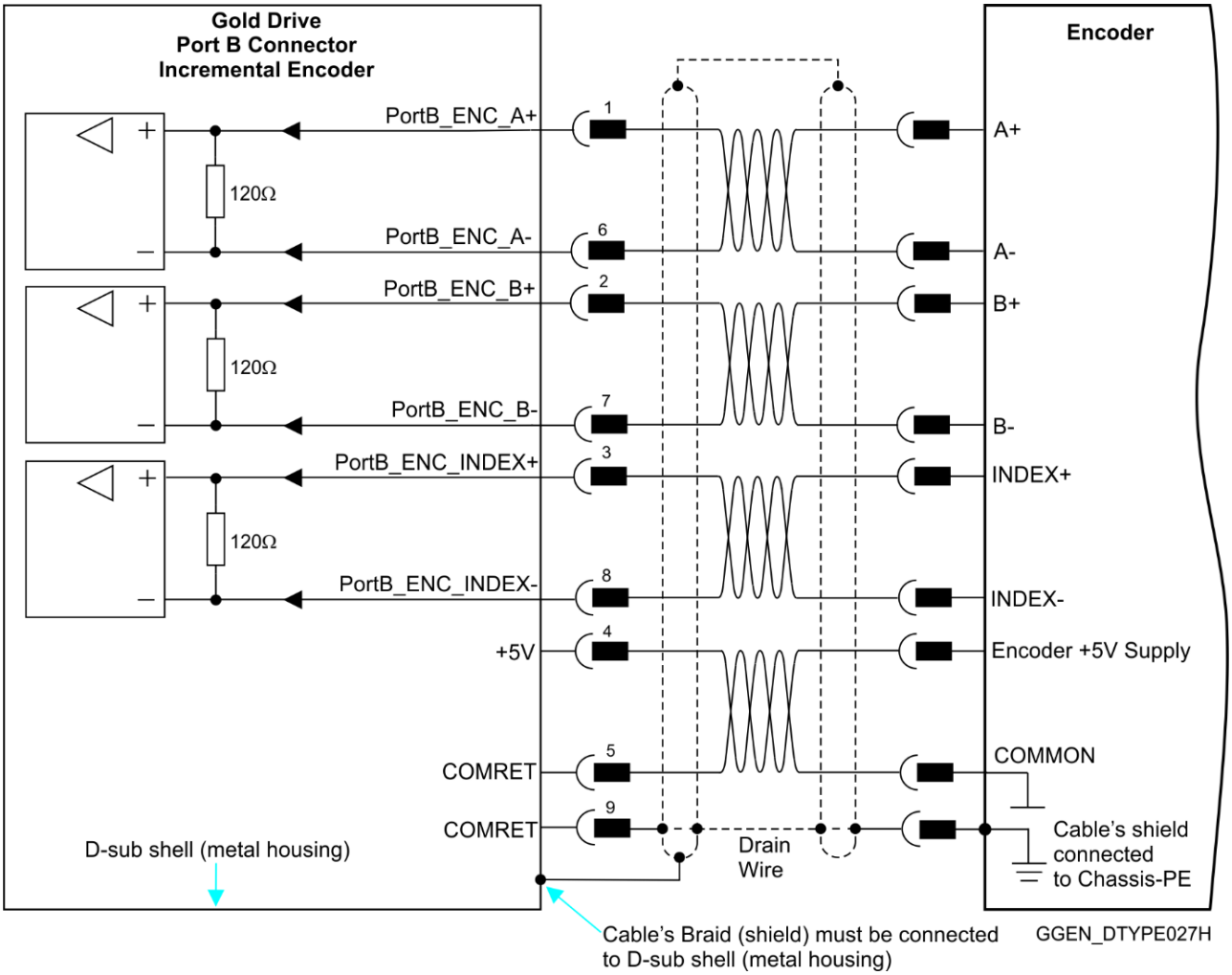

Figure 19: Port B Incremental Encoder Input – Recommended D-Type Connection Diagram

6.6.2 Interpolated Analog Encoder

The following figure describes the connections at Port B for the Interpolated Analog encoder.

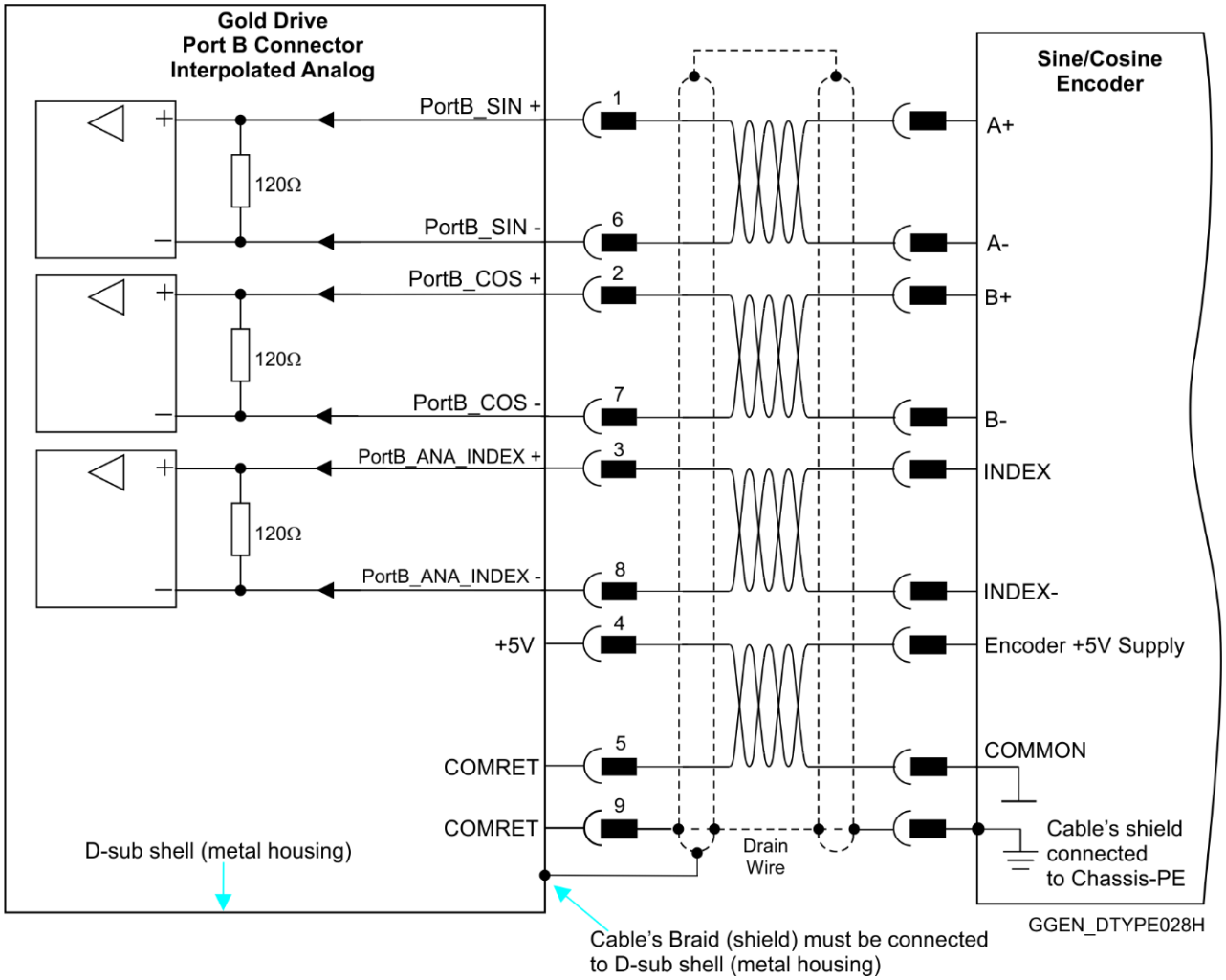

Figure 20: Port B - Interpolated Analog Encoder D-Type Connection Diagram

6.6.3 Resolver

The following figure describes the connections at Port B for the Resolver encoder.

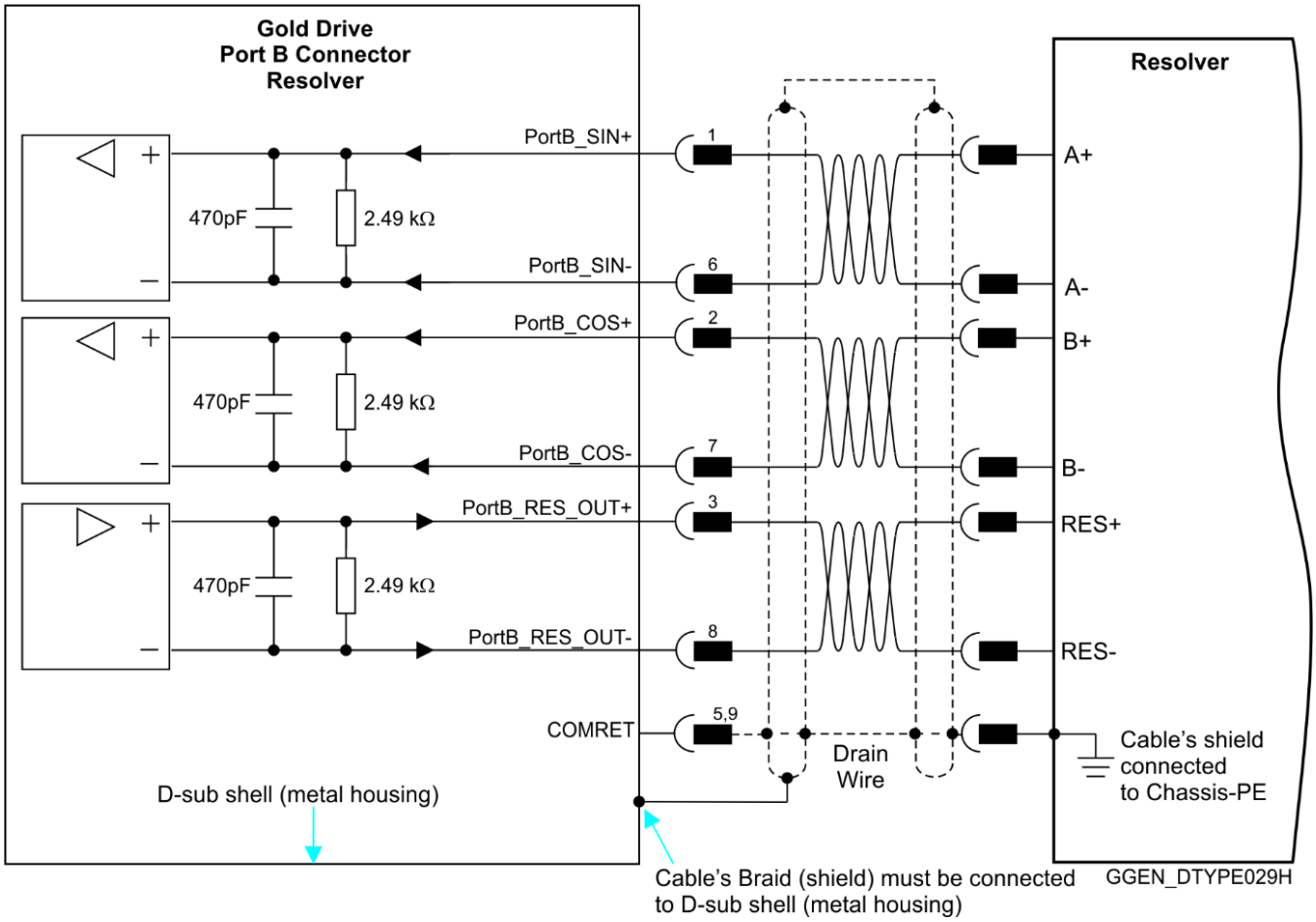

Figure 21: Port B – Resolver D-Type Connection Diagram

6.7 Port C, Analog Input, and STO

The Port C connector includes the following functions:

- **Port C: Refer to Sections 10.5 in the MAN-G-Panel Mounted Drives Hardware manual for full details**
- **Analog input: See Section 11.2 in the MAN-G-Panel Mounted Drives Hardware manual for full details.**
- **STO: See Chapter 9 in the MAN-G-Panel Mounted Drives Hardware manual for full details.**

Pin on Port C	Signal	Function
1	PortC_ENCO_A+	Buffered Channel A+/Pulse+/PWM+ output
2	PortC_ENCO _A-	Buffered Channel A-/Pulse-/PWM- output
3	PortC_ENCO _B+	Buffered Channel B+/Dir+ output
4	PortC_ENCO _B-	Buffered Channel B-/Dir- output
5	PortC_ENCO _ Index+	Buffered Channel INDEX+ output
6	STO1	STO1 Input
7, 12	STO Return Signal	STO Return Signal
8	N/C	N/C
9	COMRET	Common return
10	PortC_ENCO _ Index-	Buffered Channel INDEX- output
11	STO2	STO2 Input
13	ANALRET	Analog Input Return
14	ANALOG1-	Analog input 1-
15	ANALOG1+	Analog input 1+

Pin Positions	
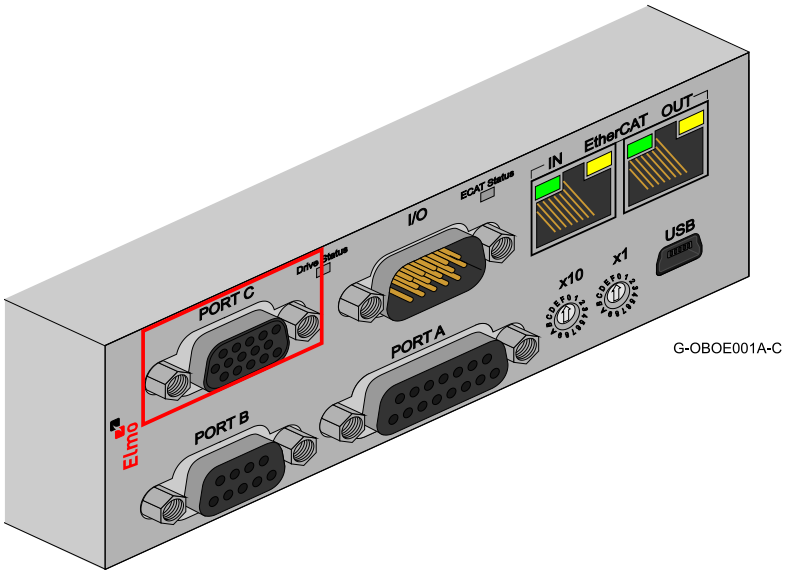 **15-Socket High Density D-Type Connector** 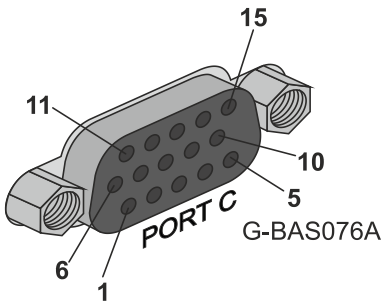	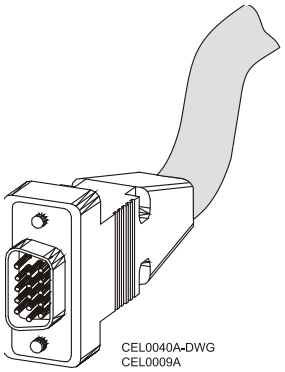 **15-Pin High Density D-Type Male Connector**

Table 6: Port C Pin Assignments

6.7.1 Port C

The following figure describes the connections at Port C for the Encoder Differential.

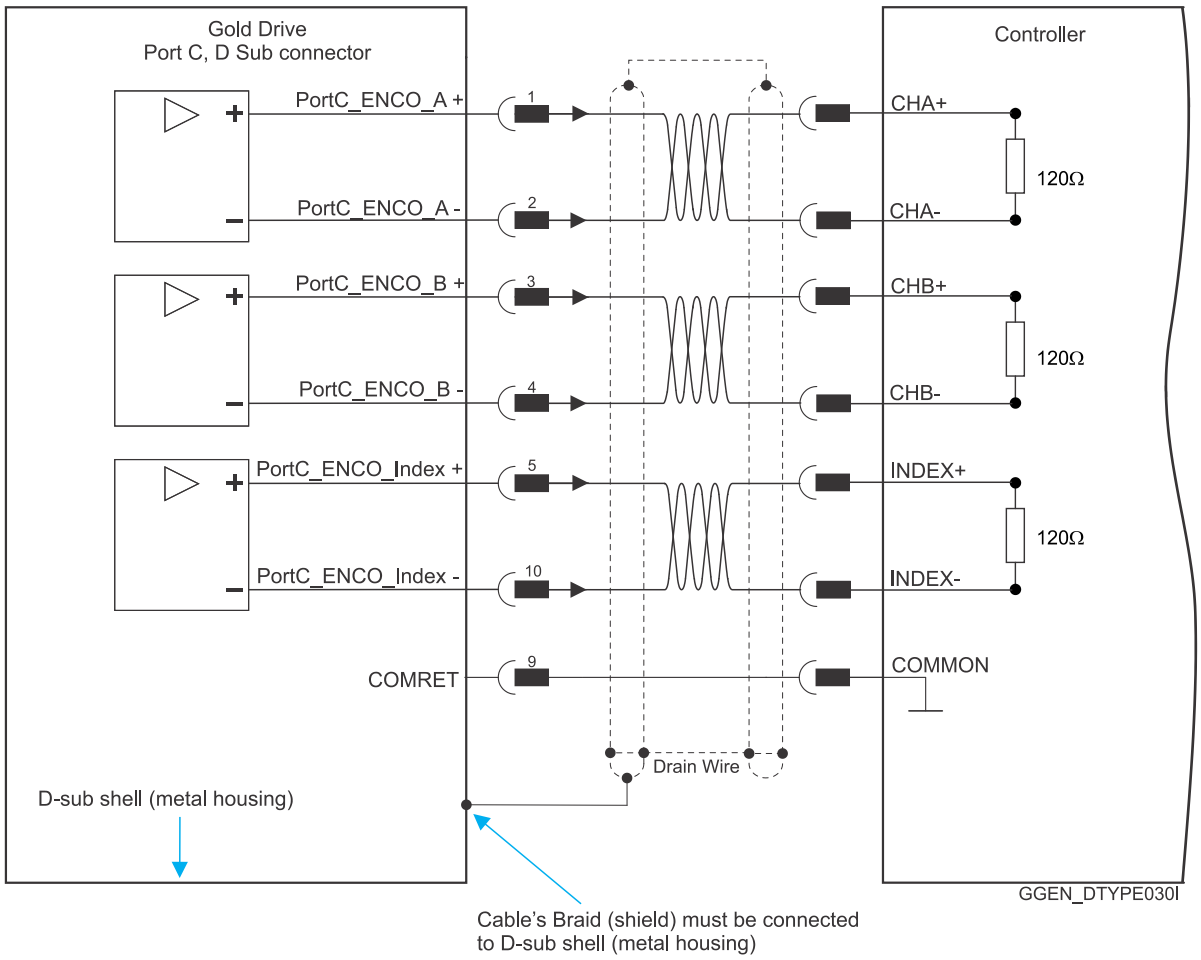

Figure 22: Encoder Differential Output – Recommended D-Type Connection Diagram

6.7.2 Analog Input

The following circuit describes the internal interface of the Analog input.

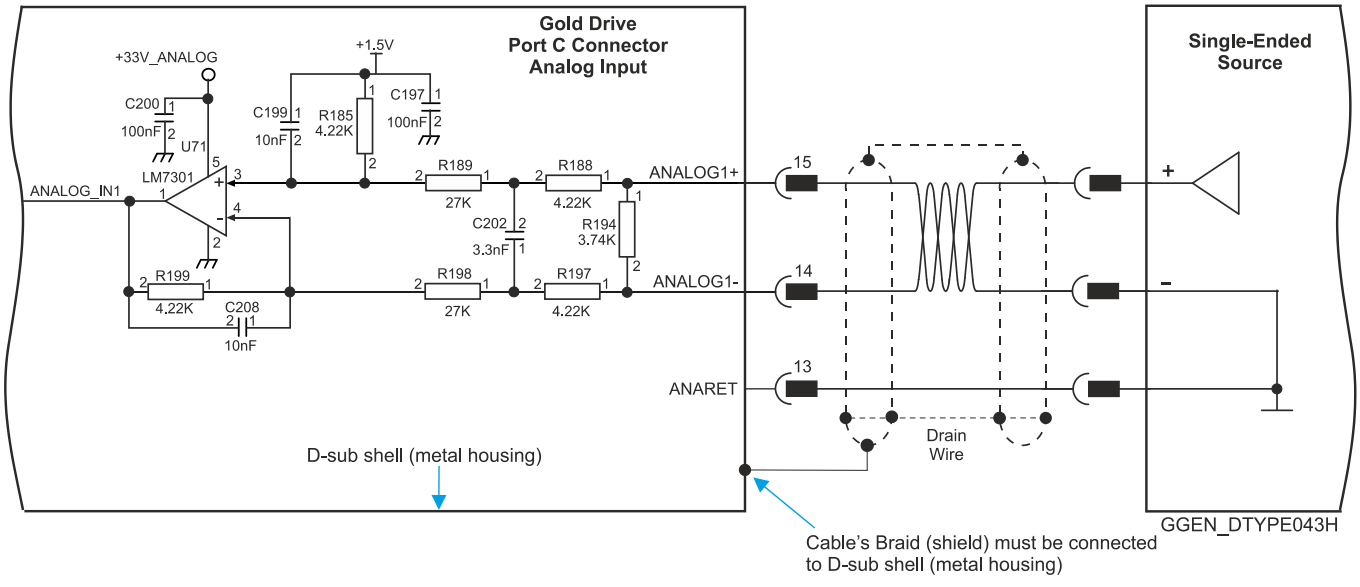

Figure 23: Differential Analog D-Type Input

6.7.3 STO

The following circuits describe the STO wiring options.

6.7.3.1 Source Mode PLC Voltage Level

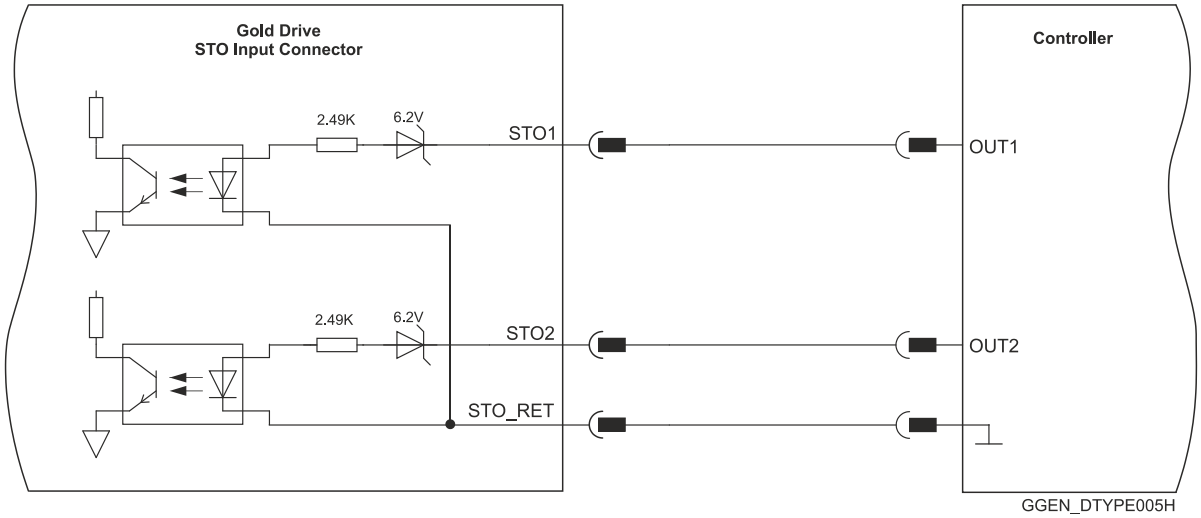

Figure 24: STO Input Connection – PLC Source Option

6.7.3.2 TTL Mode TTL Voltage Level

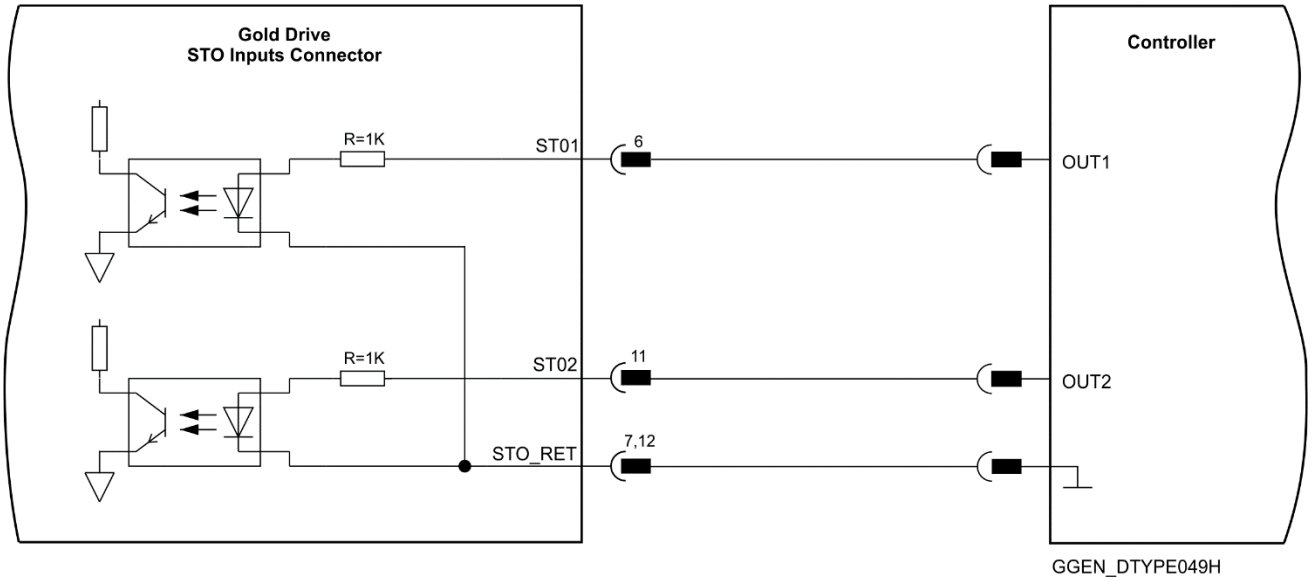

Figure 25: STO Input Connection – TTL Option

6.7.3.3 SINK Mode – PLC Voltage Level

Refer to the diagrams below for the PLC Sink option connections which is not fully certified for STO.

This option is not recommended for new designs.

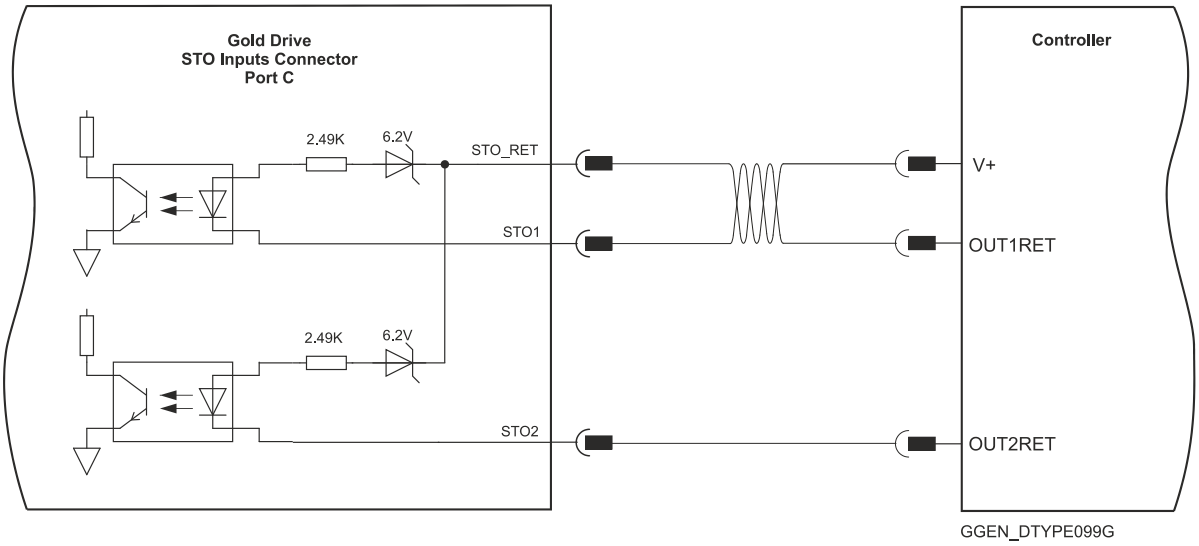

Figure 26: STO Input Connection – Sink Option

6.7.3.4 STO Output

There are two available options, as preordered according the customer request (Cat. Number):

- I/O and STO type without STO STATUS OUT
- I/O and STO type with STO STATUS OUT

If the STO STATUS OUT is configured, then OUT4 and IN6 will not be available. Refer to Figure 27 below for details of the connections. **Refer to Chapter 9 in the MAN-G-Panel Mounted Drives Hardware manual for full details.**

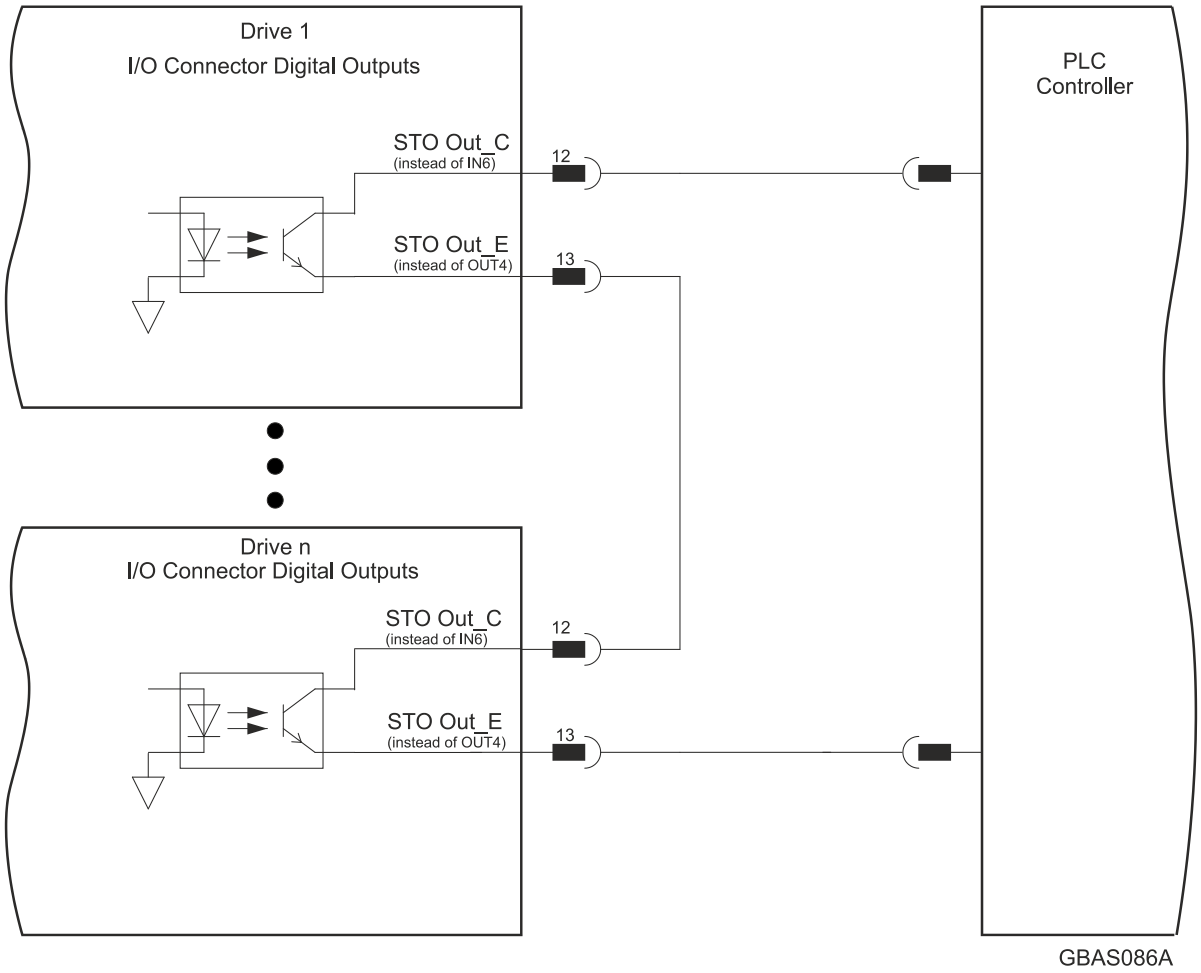

Figure 27: STO Output

6.8 Digital Inputs and Outputs

Refer to Chapter 11 in the in the MAN-G-Panel Mounted Drives Hardware manual for full details.

I/O Pins	Signal	Function
1	IN1	High speed programmable input 1
2	IN2	High speed programmable input 2
7	IN3	High speed programmable input 3
8	IN4	High speed programmable input 4
11	IN5	High speed programmable input 5
12	IN6	High speed programmable input 6
		or STO OUT Collector in the **O** version
6	INRET 1-6	Inputs 1 to 6 return for the **S/T** version
		Positive input 1 to 6 for the **H/A** version
3	OUT1	Programmable output 1
4	OUT2	Programmable output 2
5	OUT3	Programmable output 3
13	OUT4	Programmable output 4
		or STO OUT Emitter in the **O** version
10, 15	VDD	Supply for out 1-4
9, 14	VDDRET	Supply return for out 1-4

Pin Positions	
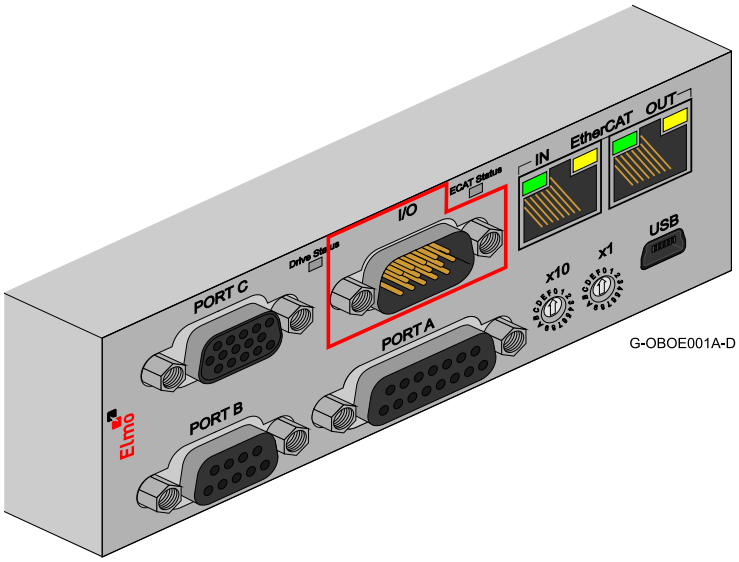 **15-Pin High Density D-Type Male Connector** 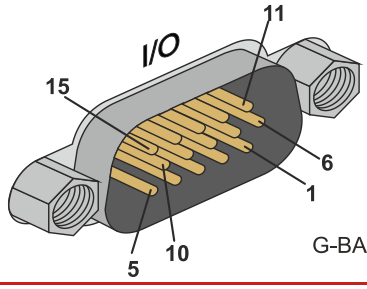	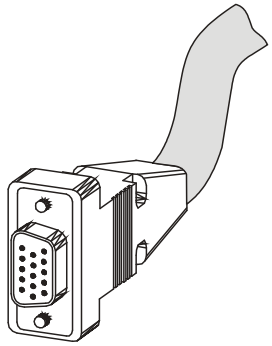 **15-Pin High Density D-Type Female Connector**

Table 7: I/O Connector Pin Assignments

6.8.1 Digital Input and Output TTL Mode

The following figure describes the connections at the I/O Port for the Digital Input and Output TTL Mode.

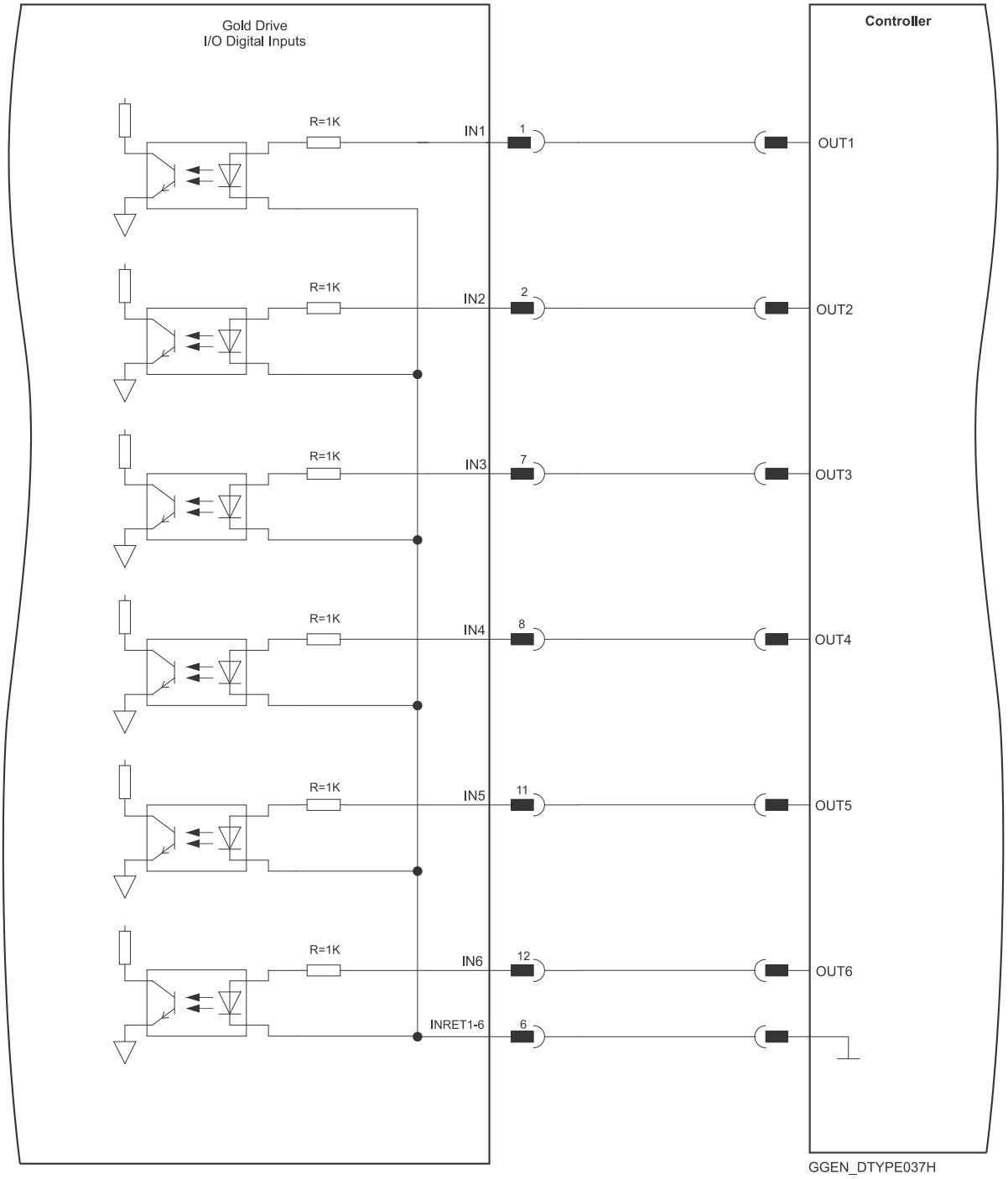

Figure 28: Digital Input D-Type Connection Diagram – TTL Option

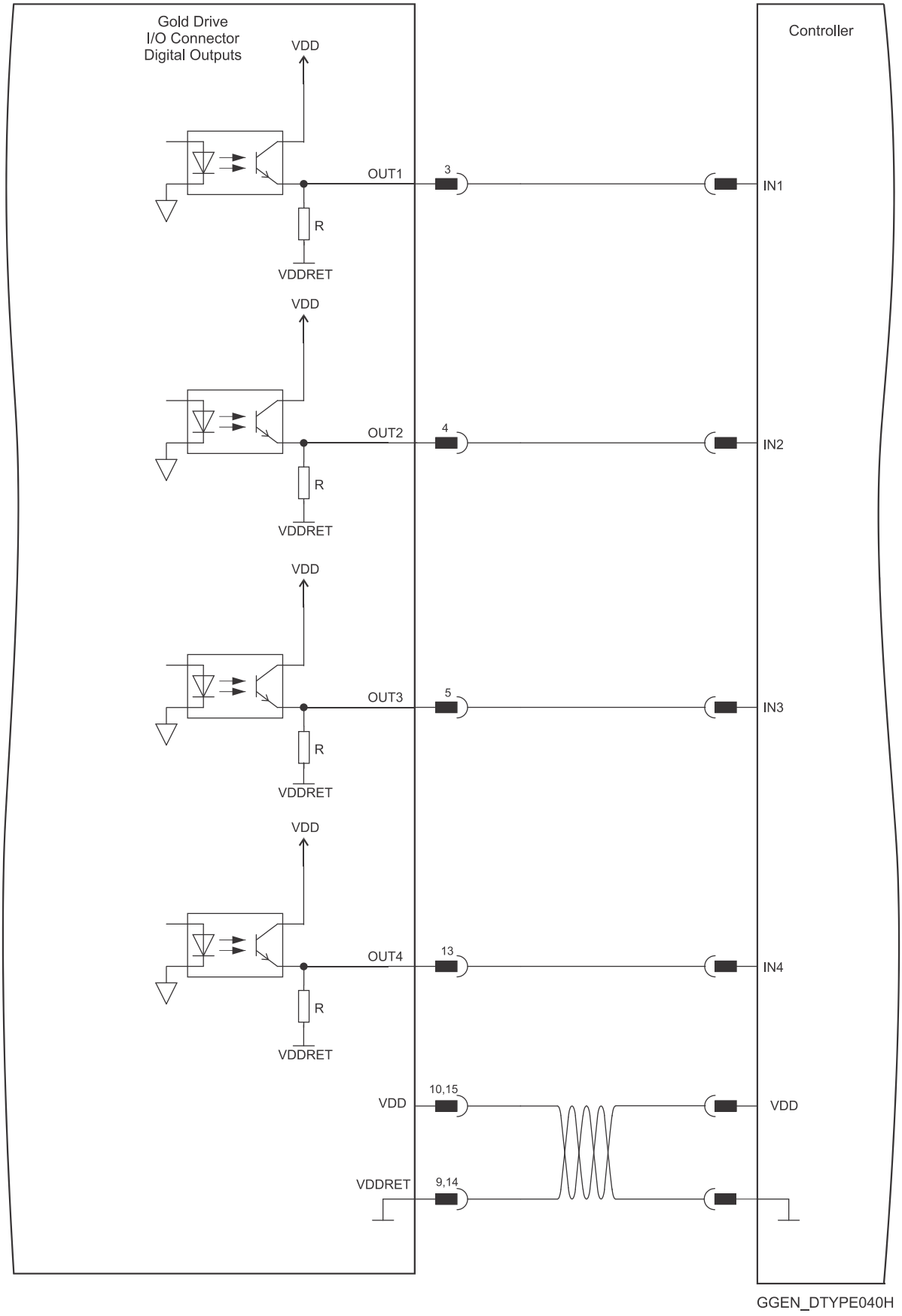

Figure 29: Digital Output D-Type Connection Diagram – TTL Option

6.8.2 Digital Input and Output PLC Source Mode

The following figure describes the connections at the I/O Port for the Digital Input and Output PLC Mode.

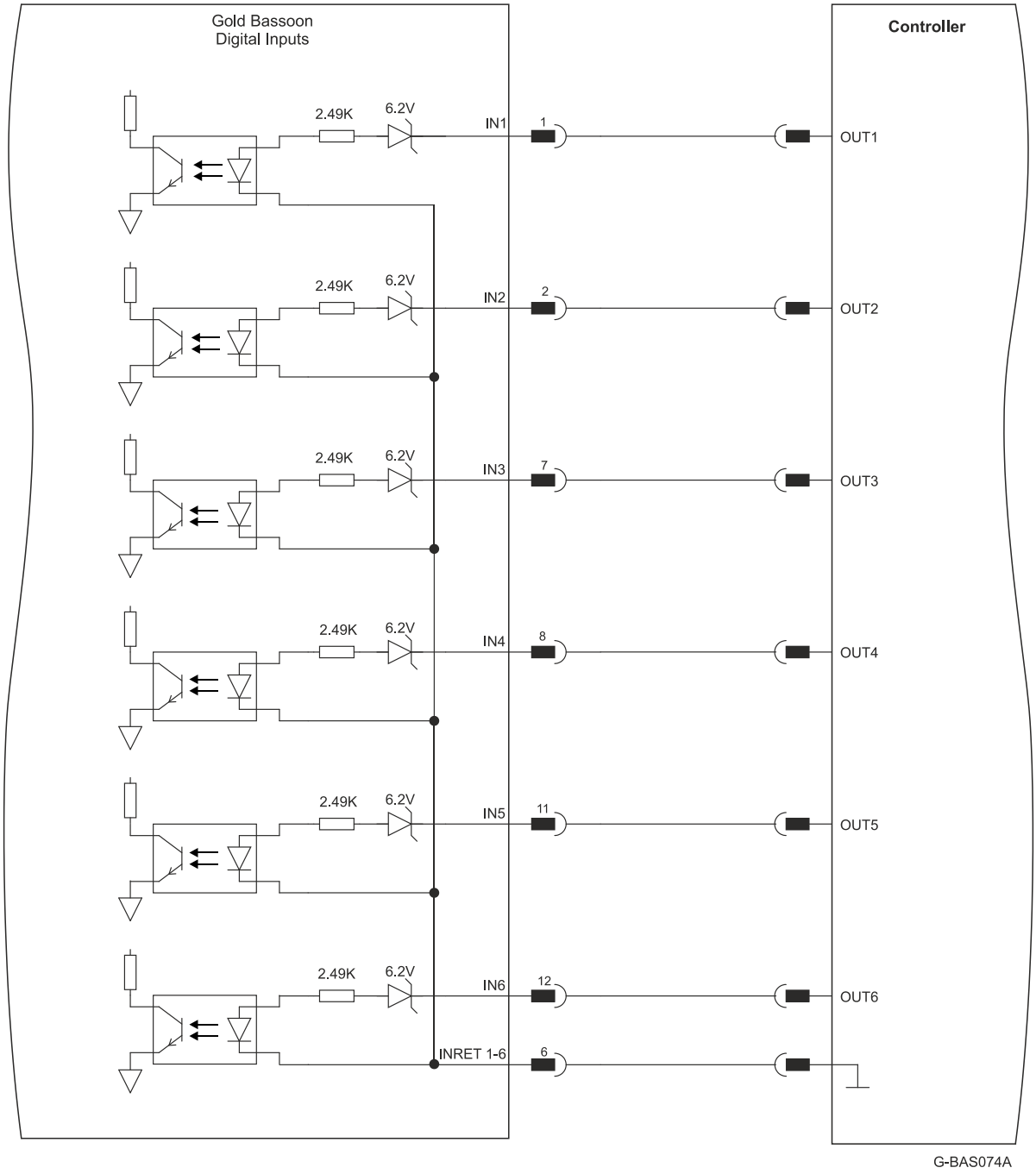

Figure 30: Digital Input D-Type Connection Diagram – Source PLC Option

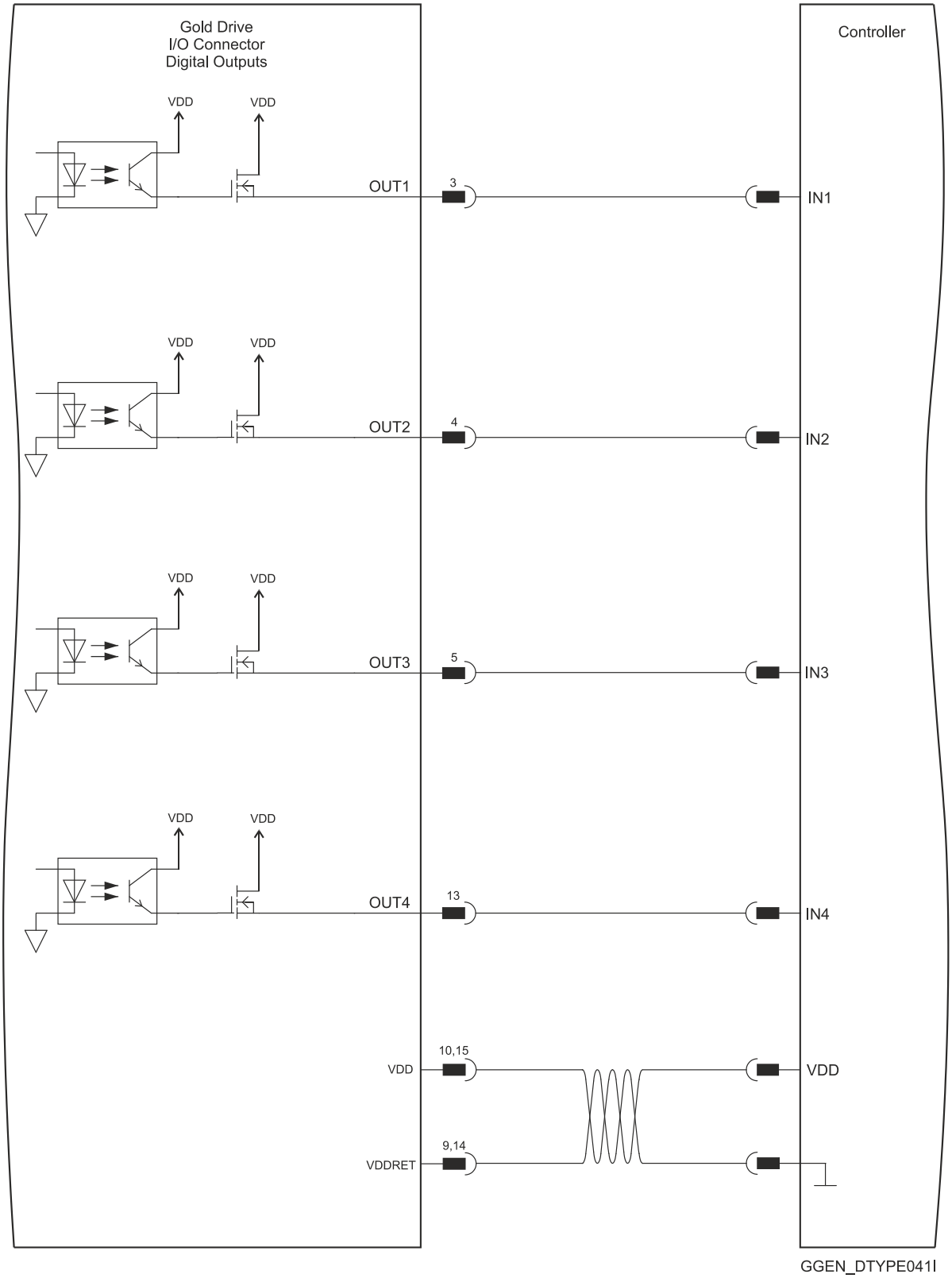

Figure 31: Digital Output D-Type Connection Diagram – Source PLC Option

6.8.3 Digital Input and Output Sink Mode

The following figure describes the connections at the I/O Port for the Digital Input and Output Sink Mode.

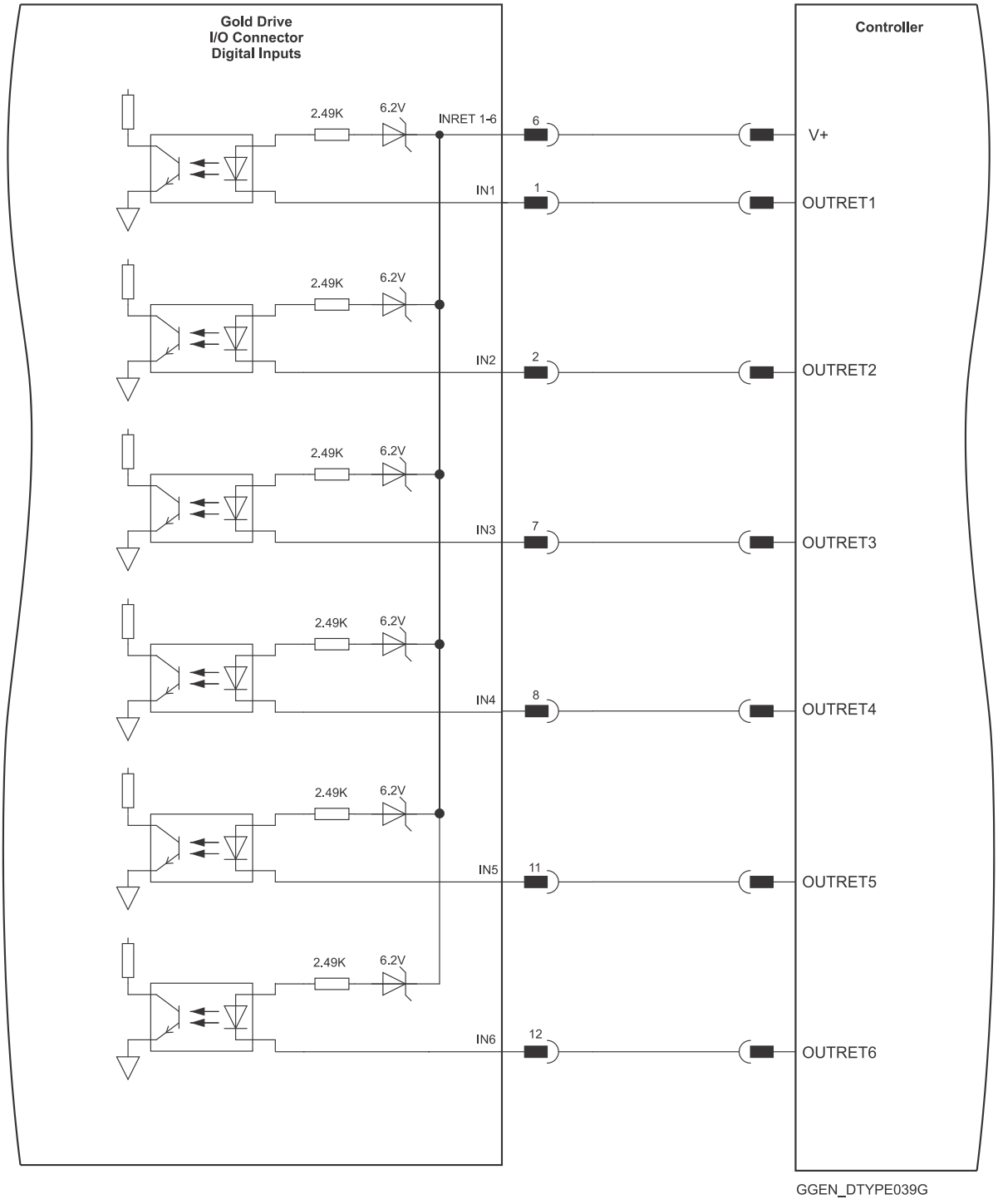

Figure 32: Digital Input D-Type Connection Diagram - Sink PLC Mode

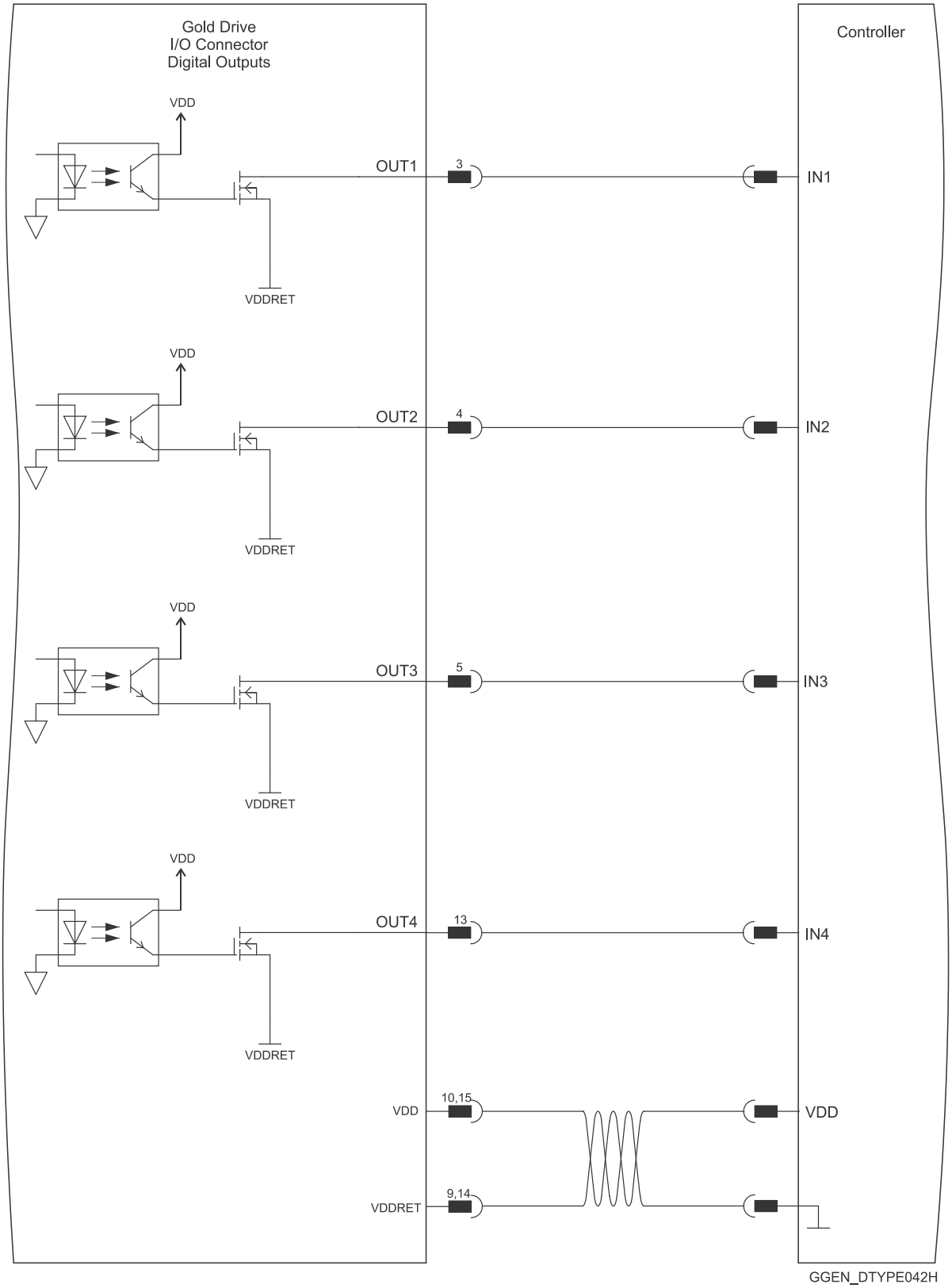

Figure 33: Digital Output D-Type Connection Diagram - Sink Mode

6.9 USB 2.0

Refer to Section 12.1 in the MAN-G-Panel Mounted Drives Hardware manual for full details.

Pin on USB	Signal	Function
1	USB VBUS	USB VBUS 5V Detector
2	USBD-	USB _N line
3	USBD+	USB _P line
5	USB COMRET	USB communication return
Pin Positions		

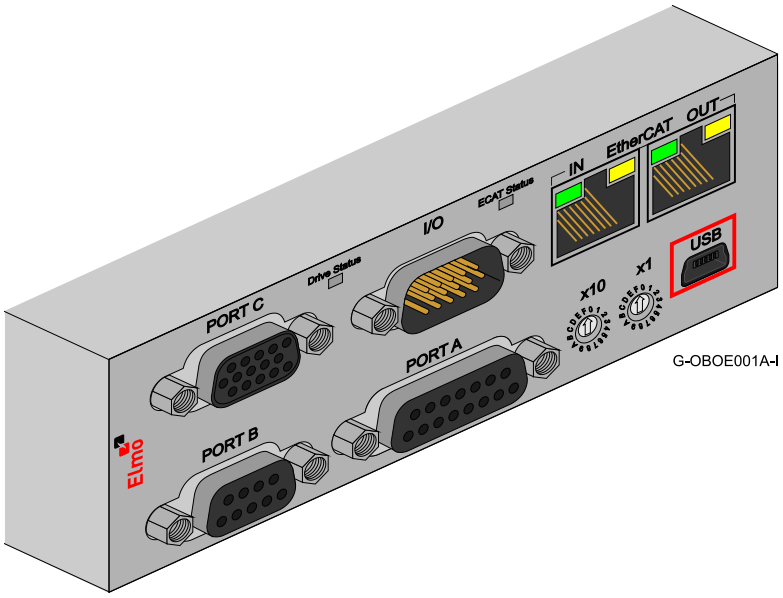

USB Mini B Connecter

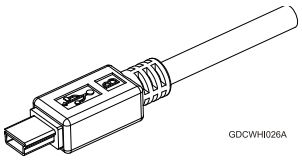

USB Device Mini B Plug

Table 8: USB 2.0 Pin Assignments

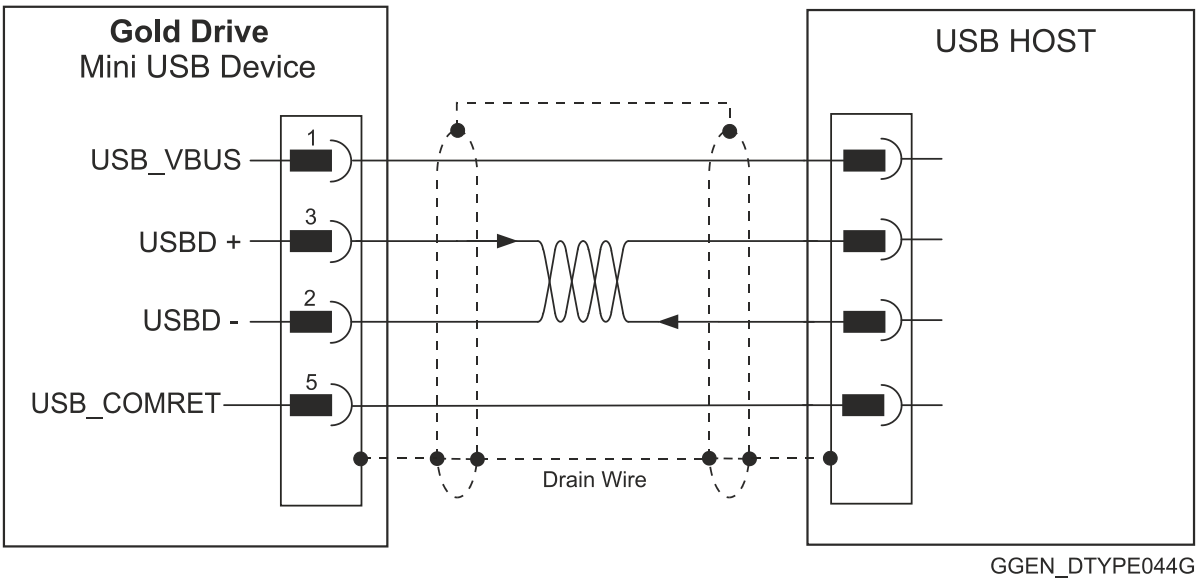

Figure 34: USB Network Diagram

6.10 Drive Status Indicator

The Gold Oboe is equipped with several light-emitting diode (LED) indicators.

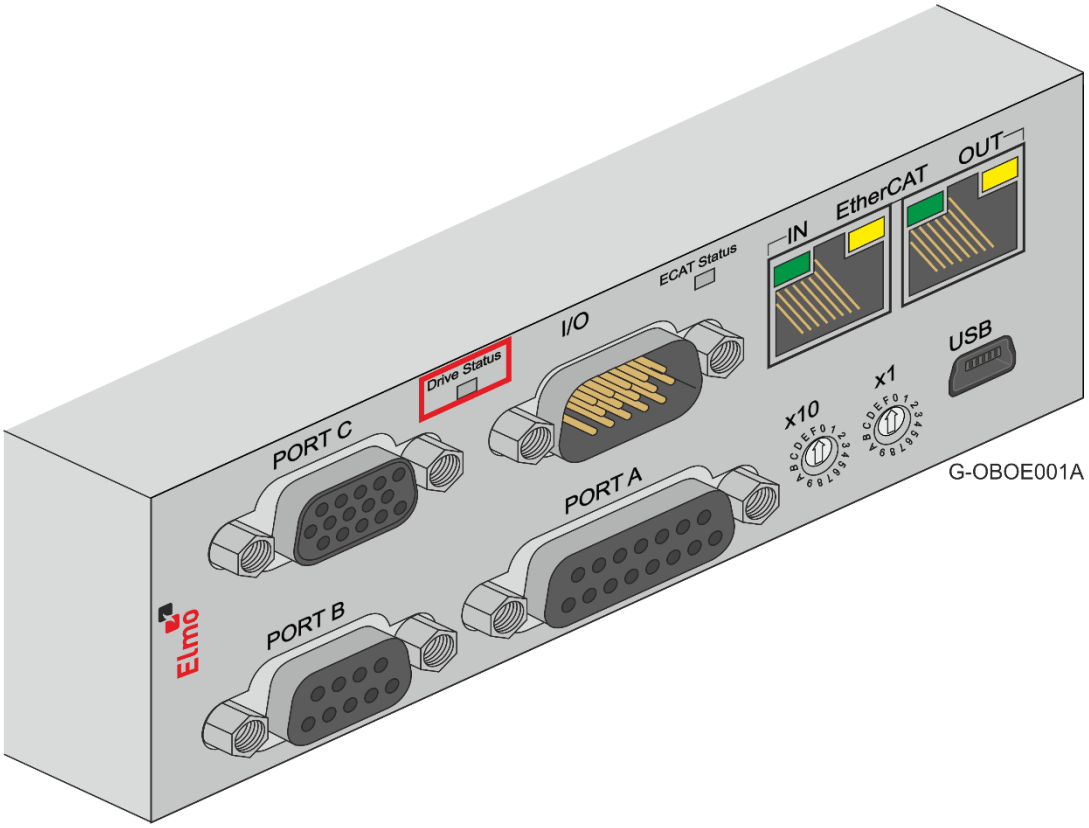

The red/green dual LED is used for immediate indication of the following states:

- **Initiation state:** In this state the LED indicates whether the drive is in the boot state (blinking red) or in the operational state (steady red).
- **Working state:** In this state the LED indicates whether the drive is in an amplifier failure state (red) or is ready to enable the motor (green).

6.11 EtherCAT Communications Version

Fieldbus communications are industrial network protocols for real-time distributed control that allows connection of servo drives. The Gold Oboe supports the following EtherCAT fieldbus type industrial network protocol:

Fieldbus Type	Product Number
EtherCAT + Switches	**G-OBO**XX/YYY**F**XXXX

6.11.1 EtherCAT IN/Ethernet Pinouts

Refer to section 12.2 in the MAN-G-Panel Mounted Drives Hardware manual for more details.

Pin on EtherCAT IN	Signal	Function
1	EtherCAT_IN_TX+/Ethernet_TX+	EtherCAT in transmit+/Ethernet transmit +
2	EtherCAT_IN_TX-/Ethernet_TX-	EtherCAT in transmit-/Ethernet transmit -
3	EtherCAT_IN_RX+/Ethernet_RX+	EtherCAT in receive+/Ethernet receive +
4/5	N/A	
6	EtherCAT_IN_RX-/Ethernet_RX-	EtherCAT in receive-/Ethernet receive -
7/8	N/A	
Pin Positions		

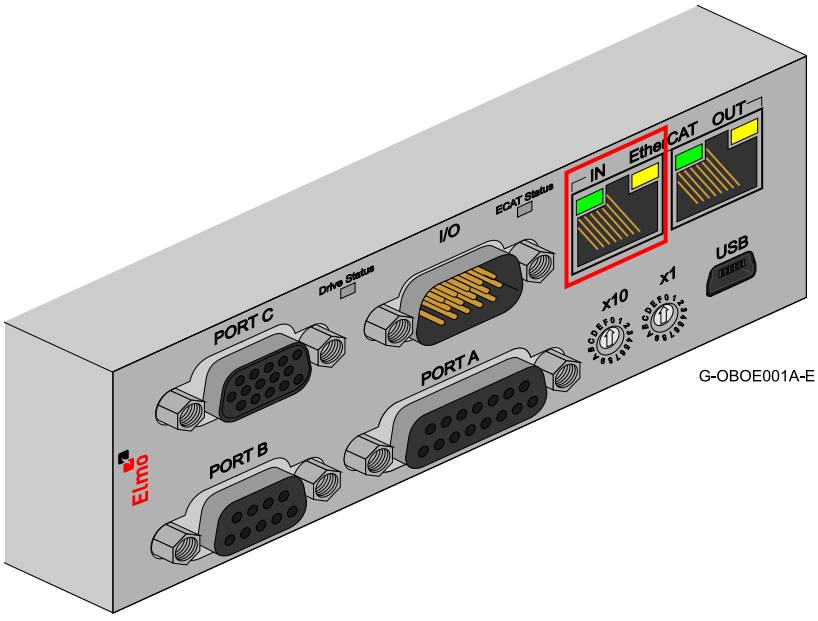

EtherCAT IN RJ-45 Connector

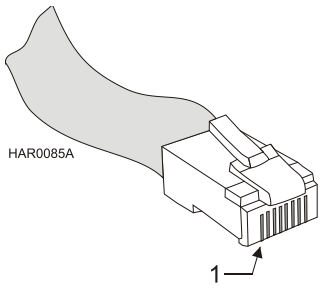

Standard CAT5e Ethernet Cable

Table 9: EtherCAT In/Ethernet Connector Pin Assignments

6.11.2 EtherCAT OUT Pinouts

See Section 12.2 in the MAN-G-Panel Mounted Drives Hardware manual for the electrical diagram.

Pin on EtherCAT OUT	Signal	Function
1	EtherCAT_OUT_TX+	EtherCAT out transmit +
2	EtherCAT_OUT_TX-	EtherCAT out transmit -
3	EtherCAT_OUT_RX+	EtherCAT out receive +
4/5	N/A	
6	EtherCAT_OUT_RX-	EtherCAT out receive -
7/8	N/A	
Pin Positions		

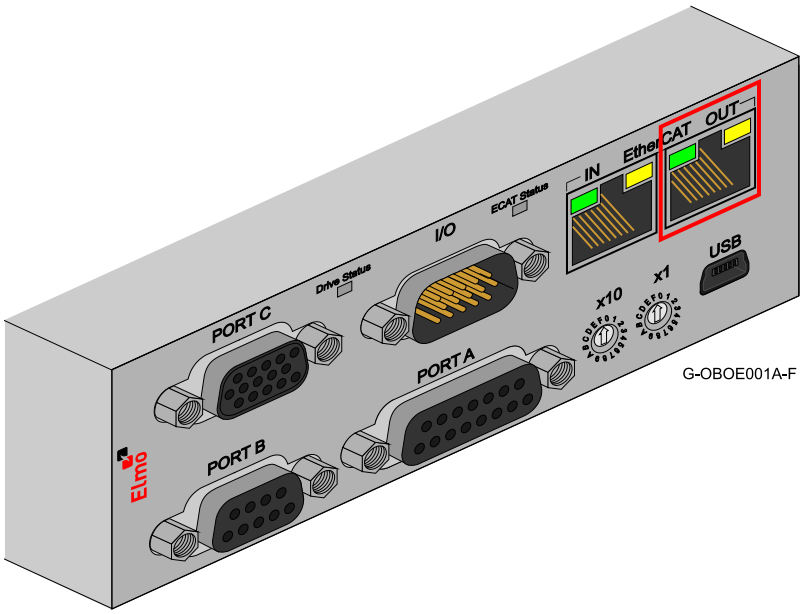

EtherCAT OUT RJ-45 Connector

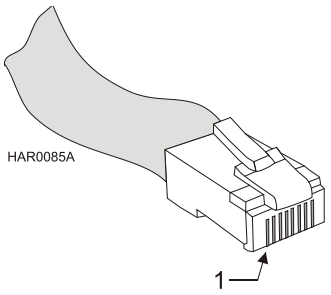

Standard CAT5e Ethernet Cable

Table 10: EtherCAT Out Connector Pin Assignments

6.11.3 EtherCAT Wiring

Figure 35 describes the wiring diagram for the EtherCAT connections.

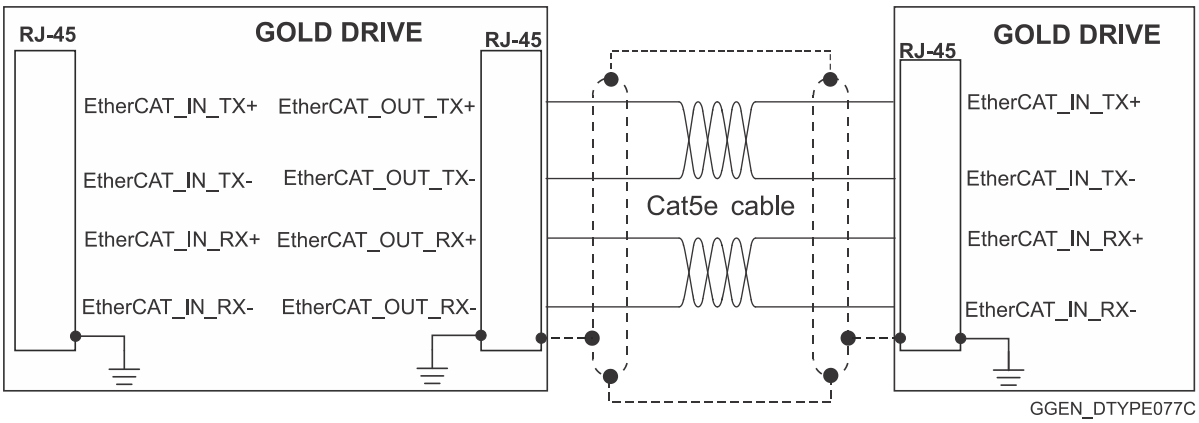

Figure 35: EtherCAT RJ-45 Connections

6.11.4 EtherCAT Link Indicators

The Gold Oboe can serve as an EtherCAT slave device. For this purpose it has two RJ-45 connectors, which are designated as EtherCAT In and EtherCAT Out. Each of these RJ-45 connectors has two status LEDs, which are shown in Figure 36.

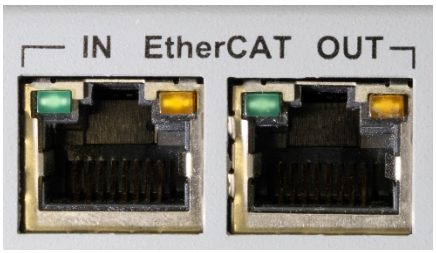

Figure 36: Ethernet Connector LEDs

The green LED is the link/activity indicator. It shows the state of the applicable physical link and the activity on that link. The amber LED is the speed indicator. It shows the speed of the connection on the Ethernet line. Refer to the section 12.2.2 in the document; MAN-G-Panel Mounted Drives Hardware manual.

6.11.5 EtherCAT Status Indicator

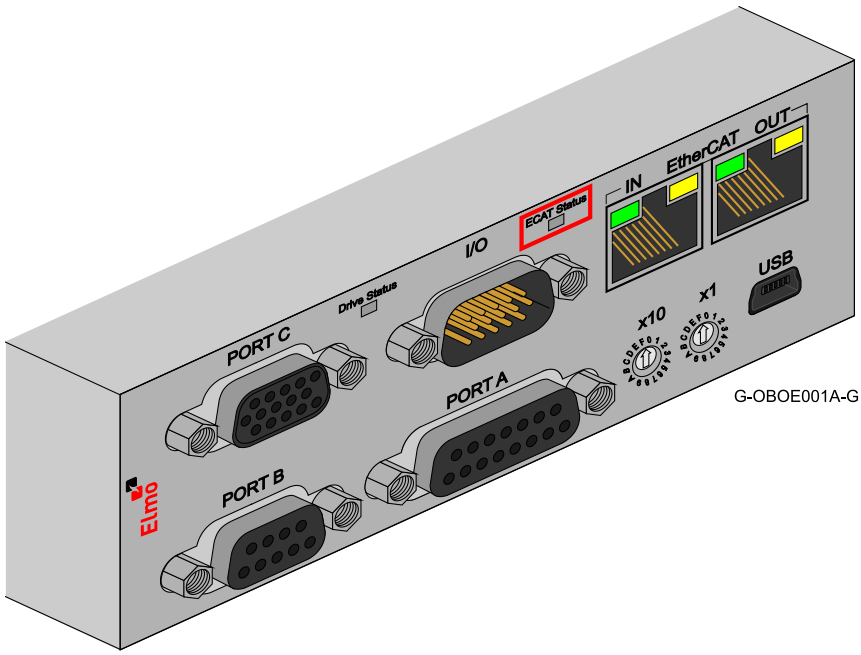

The EtherCAT status indicator is a red/green dual LED. It combines run indication (when it is green) and error indication (when it is red) of the EtherCAT device.

6.11.6 EtherCAT Switches

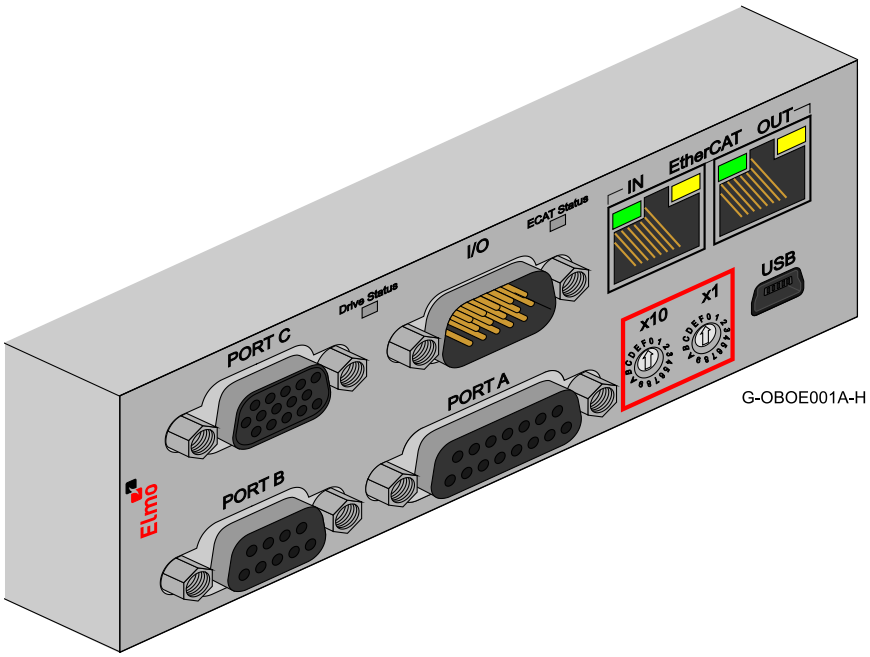

Note: This option is only available in the G-OBOXX/YYYFXXXX type. The EtherCAT address of each axis is specified by the two EtherCAT switches. **For full details, see Section 6.8.2.4 in the MAN-G-Drive Hardware manual.**

6.12 CAN Communications Version

Fieldbus communications are industrial network protocols for real-time distributed control that allows connection of servo drives. The Gold Oboe supports the following CAN fieldbus type industrial network protocol.

Fieldbus Type	Product Number
CAN	**G-OBO**XX/YYY**S**XXXX

See Section 12.4 in the MAN-G-Panel Mounted Drives Hardware manual for the electrical diagram.

Pin on CAN	Signal	Function
1	CAN_H	CAN_H bus line (dominant high)
2	CAN_L	CAN_L bus line (dominant low)
3	CAN_RET	CAN Return
4, 5	N/A	—
6	CAN_SHLD	Shield, connected to the RJ plug cover
7	CAN_RET	CAN Return
8	N/A	—

Pin Positions

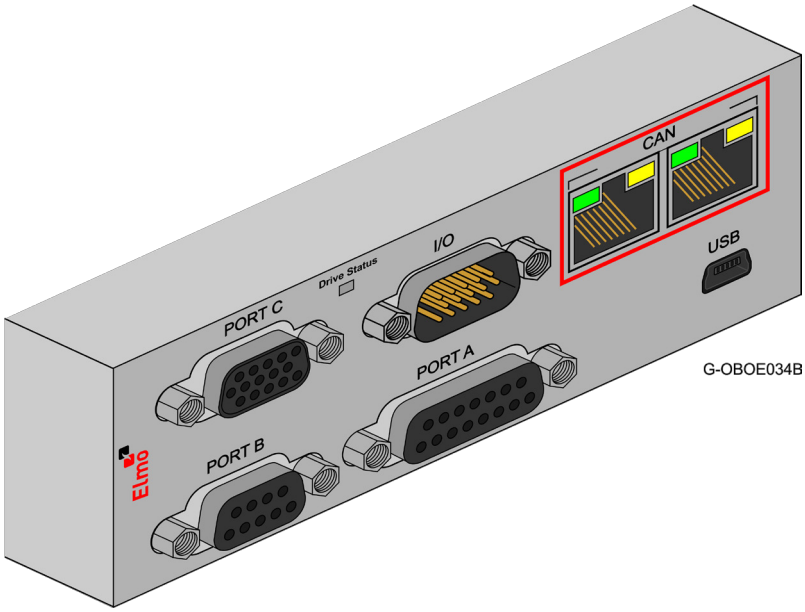

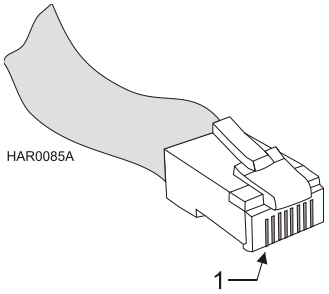

Standard CAT5e Ethernet Cable

Table 11: CAN In/Out Connector Pin Assignments

6.12.1 CAN Wiring

Figure 37 describes the CAN wiring diagram below.

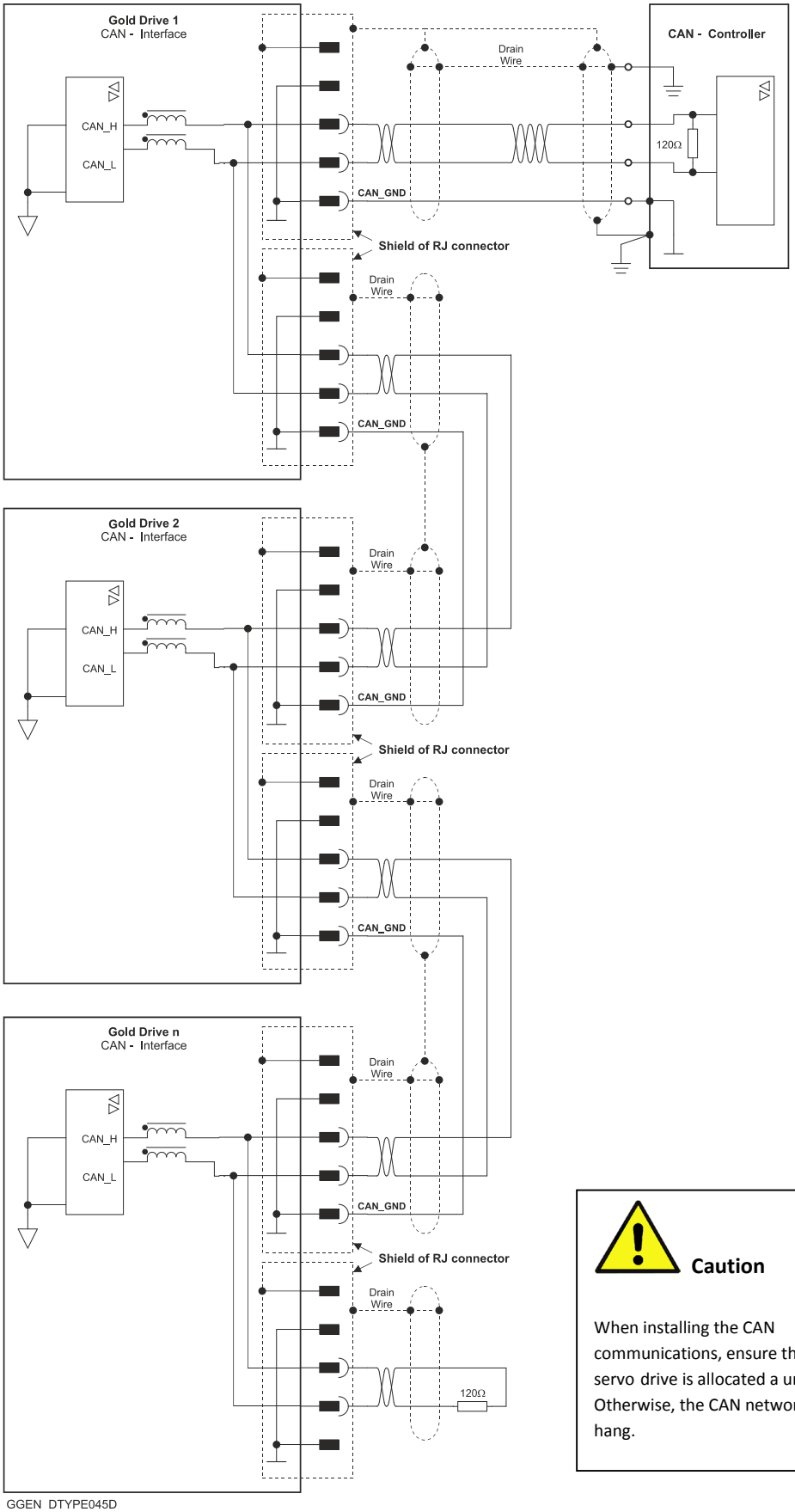

Figure 37: Gold Oboe Connection Diagram – CAN

Caution

When installing the CAN communications, ensure that each servo drive is allocated a unique ID. Otherwise, the CAN network may hang.

Chapter 7: Gold Oboe Heat Dissipation

Typical Servo Drive operation is characterized by high power peaks with relatively low average power consumption. In most cases, the average power is less than 15% - 25% of the consumed peak power.

When delivering power to the motor, the Servo Drive creates heat that must be carefully controlled to enable smooth and reliable enduring operation.

Proper selection of the heat dissipation device can contribute significantly to the efficiency of the overall application, space and costs savings.

7.1 Power Dissipation

The integral heat sink of the Gold Oboe can dissipate around 18W – 22W, depending on the mounting method. Due to the nature of servo drive operation, whose high power peaks with very low average power consumption, mounting the Drum on an external heat dissipating device can be very efficient and beneficial. This “No Fan” approach can be advantageous up to an average current of 20A -25A with the 800V types, and 35A- 40A with the 400V types.

1.1.1. Gold Oboe Thermal Data

TBD

Figure 38: Power Dissipation for “800V” types

TBD

Figure 39: Power Dissipation for “400V” types

Chapter 8: Powering Up

After the Gold Oboe is connected to its device, it is ready to be powered up.

Caution:
Before applying power, ensure that the AC supply is within the specified range.

8.1 Initializing the System

After the Gold Oboe has been connected and mounted, the system must be set up and initialized. This is accomplished using the *EASII*, Elmo's Windows-based software application. Install the application and then perform setup and initialization according to the directions in the *EASII User Manual*.

Chapter 9: Gold Oboe Dimensions

This chapter provides detailed technical dimensions regarding the Gold Oboe.

9.1 EtherCAT Version

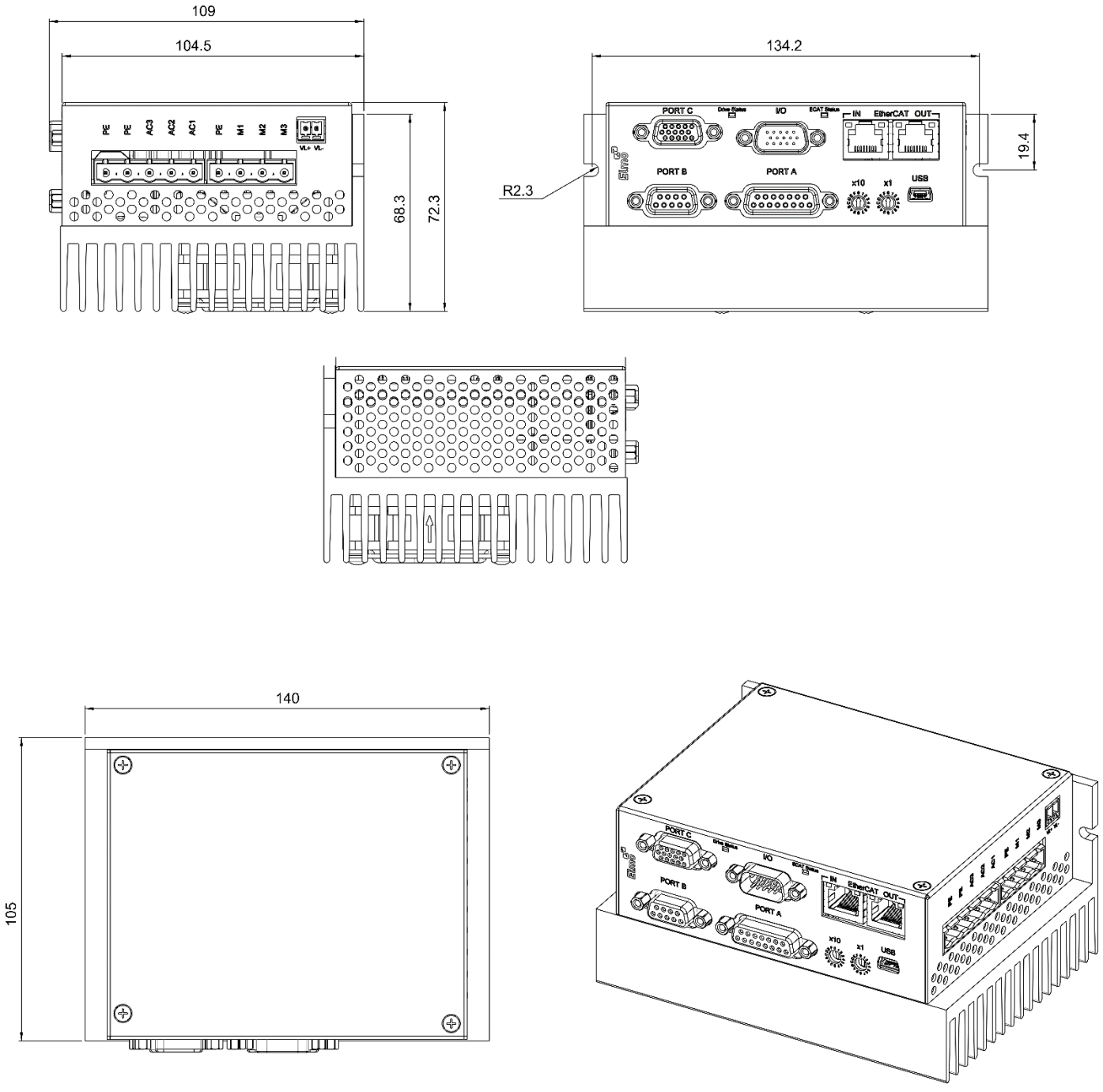

Figure 40: Gold EtherCAT Oboe with Fins Heat-Sink and Fan

9.2 CAN Version

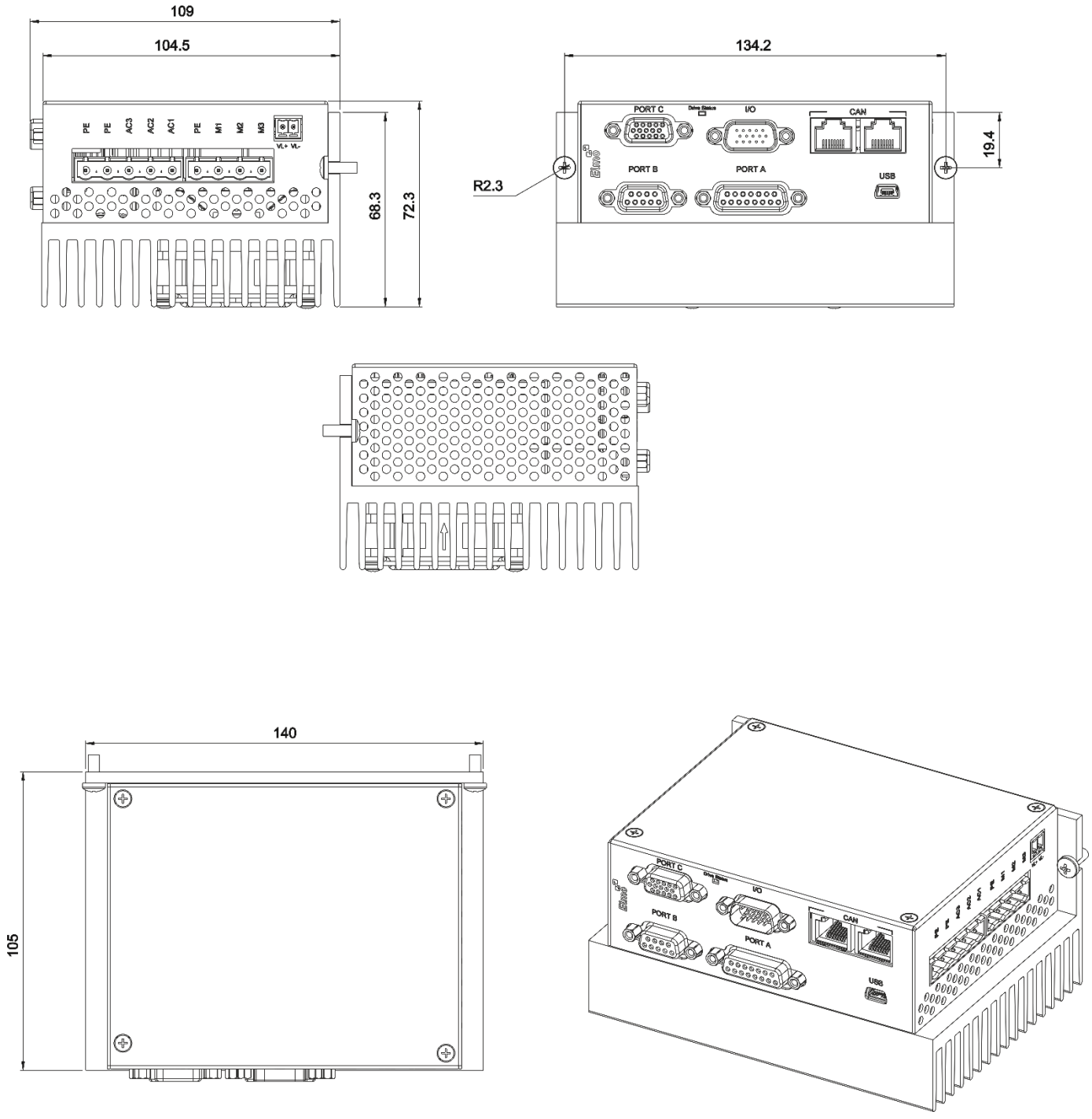

Figure 41: Gold CAN Oboe with Fins Heat-Sink and Fan

Inspiring Motion
Since 1988
For a list of Elmo's branches, and your local area office, refer to the Elmo site www.elmomc.com
Elmo
Motion Control