HR4
Ultrasonic Motor
User Manual

March 2005

For Further Information Contact ....
Heason Technologies Group Ltd
Tel: +44(0)1403 755800
Fax: +44(0)1403 755810
Email: sales@heason.com
Freephone 0800 374903 www.heason.com
Heason Technologies Group

P/N MSP4-458-000-A

Nanomotion Ltd. POB 223, Yokneam 20692, Israel
Tel: 972-4-959-0862 Fax: 972-4959-0995
Web Site: www.nanomotion.com
E-mail: nano@nanomotion.com

Limited Warranty

Nanomotion (hereinafter NM) warrants the product (other than software) manufactured by it to be free from defects in material and workmanship for a period of time of one year (except those parts normally considered as consumable/expendable components such as motor conditioning brushes). The warranty commences thirty (30) days from the date of shipment.

NM warrants those parts replaced under warranty for a period equal to the remaining warranty coverage of the original part.

NM's sole and exclusive obligation under this warranty provision shall be to repair, or at its sole option exchange defective products or the relevant part or component, but only if : (i) the Purchaser reports the defect to NM in writing and provides a description of the defective product and complete information about the manner of its discovery within ten (10) days of its discovery; (ii) NM has the opportunity to investigate the reported defect and determines that the defect arises from faulty material, parts or workmanship; and (iii) the Purchaser returns the affected product to a location designated by NM. These provisions constitute the exclusive remedy of the Purchaser for product defects or any other claim of liability in connection with the purchase or use of NM products.

This warranty policy applies only to NM products purchased directly from NM or from an authorized NM distributor or representative.

This warranty shall not apply to (i) products repaired or altered by anyone other than those authorized by NM; (ii) products subjected to negligence, accidents or damage by circumstances beyond NM control; (iii) product subjected to improper operation or maintenance (i.e. operation not in accordance with NM Installation Manuals and/or instructions) or for use other than the original purpose for which the product was designed to be used.

The warranty stands only when the motors are used with the NM drivers/ amplifiers.

NM shall not in any event have obligations or liabilities to the Purchaser or any other party for loss of profits, loss of use or incidental, increased cost of operation or delays in operation, special or consequential damages, whether based on contract, tort (including negligence), strict liability, or any other theory or form of action, even if NM has been advised of the possibility thereof, arising out of or in connection with the manufacture, sale, delivery, use, repair or performance of the NM products. Without limiting the generality of the preceding sentence, NM shall not be liable to the Purchaser for personal injury or property damages.

CE Compliance

The motors and drivers comply to the following directive:

Safety : IEC 61010-1:1990

EMC : 89/336/EEC as amended by 92/31/EEC and 93/68/EEC

Harmonized Standards to which conformity is declared:

EN 50081- 2:1993/EN 55011:1991

Generic Emission Standards Class A for radiated emission and Class B for conducted emission.

EN 50082- 2:1995 Generic Immunity Standard

NOTE: *UHV motors are designed for convenient interface to the UHV setup. The motors are therefore supplied with three open electrical leads. Whereas standard motors comply with CE regulations and the UHV motors have the same internal design as standard motors, the UHV motors are supplied as components and CE conformity in both EMI and Safety must be implemented as part of the UHV system design.*

Copyright

April 2000. This document contains proprietary information of Nanomotion, Ltd. and may not be reproduced in any form without prior written consent from Nanomotion Ltd.

Preface

This Installation Manual is designed to help the reader install and operate the various types of Nanomotion's HR4 Piezoceramic Motors. This manual assumes that the reader has a fundamental understanding of basic servo systems, as well as motion control concepts and applicable safety procedures.

The manual describes the physical dimensions as well as the mechanical and electrical installation procedures for these motors.

Warranty

The motors are covered by warranty for a period of twelve months from the date of invoice.

The following voids the warranty:

Misuse or incorrect mounting, incorrect electrical connections, removal of motor cover or of serial number, modification of parts, and any other use that is not according to the cautions and warnings provided in this guide.

Liability for replacement will be determined after inspection of any defective item by Nanomotion or an approved agent.

Patents

Aspects of the HR4 motors and relevant applications are protected by the following patent and patent applications:

- US 5453653
- US 5714833
- US 5696421
- US 5616980
- US 5682076

Definition of Terms

NOTE: *Additonal usefull information.*

CAUTION*: Identifies conditions or practices that could result in damage to this product or other property.*

⚠ ***WARNING: Identifies conditions or practices that could result in personal injury,*** **damage to the product** ***or other property****.*

Warnings and Cautions

⚠ ***WARNINGS***

Do not remove the cover of the motor or disassemble its connector. High voltage inside.

Be sure to ground the motor to the electrical network ground (according to the following instructions) before operating the motor.

CAUTIONS

- *Arrows on motor indicate direction of motion. Align accordingly.*
- *Do not set power-on unless motor is mounted and preloaded!*
- *Do not immerse the motor in any liquid or cleaning agent.*
- *Use only a clean cloth to wipe the motor.*
- *Be sure that the motor, and specifically the 'finger tips', are not subjected to mechanical shocks.*
- *Be sure that the distance of the motor to the plate enables the motor* finger tip *to contact the driving plate, otherwise the motor might be damaged during operation.*
- *The mounting base and the method used for mounting should be designed for maximum mechanical rigidity and stiffness.*
- *Reducing the length of the supplied motor cable* may damage *the motor. Do not attempt to shorten the cable without prior confirmation from Nanomotion.*
- *Extending the motor cable will not damage the motor, however it will affect its performance.*

Table of Contents

1. INTRODUCTION 1-1

1.1 About the Motor 1-1

1.2 Vacuum Motors 1-1

1.3 HR4 System Parts 1-2

1.4 Handling 1-2

1.5 Installation and Servicing 1-2

2. PREPARATION AND INSTALLATION 2-1

2.1 Preparation 2-1

2.1.1 Mounting Base 2-2

2.1.2 Limiting Stage Motion 2-3

2.2 Motor Installation 2-4

2.2.1 Bonding the Driving Plate to the Stage 2-4

2.2.2 Mounting the Motor 2-7

2.2.3 Motor Grounding 2-9

2.2.4 Motor Connections 2-10

2.2.4.1 Motor Connector Pinout 2-10

2.2.4.2 System Electrical Configuration 2-11

2.2.5 Motor Run-In 2-12

3. SPECIFICATIONS 3-1

3.1 General 3-1

3.2 Specification Parameters 3-3

3.2.1 Performance 3-3

3.2.2 Electrical 3-3

3.2.3 Environmental 3-3

3.2.4 Physical Dimensions 3-3

3.2.5 Performance Envelope with the AB5 driver 3-4

3.2.6 Performance Envelope with the AB1A, AB2, AB4 drivers 3-6

3.3 Schematics 3-6

3.3.1 Dimensions for Standard and High-Vacuum Motors 3-6

3.3.2 Dimensions for Ultra-High-Vacuum Motors 3-7

3.3.3 Mounting Base Dimensions 3-8

1. Introduction

1.1 About the Motor

The HR4 motors are high precision ceramic motors. Designed and manufactured by Nanomotion, Ltd., the HR4 motors, combine unlimited stroke with high resolution in compact dimensions. Among its applications are microscopy, precision motion, robotics, etc.

The motors provide a linear response to the input voltage. The operation of the motor and driver resembles that of a DC-motor driven by a voltage amplifier.

The specifications described in this chapter apply only to the motor driven by AB1A Driver. Minor differences may result if AB2, AB4 or AB5 are used.

1.2 Vacuum Motors

Applications of the Nanomotion motors for vacuum and high-vacuum environments include wafer inspection and metrology, scanning stages and lithography. The HR4-V and HR4-U motors are constructed of materials that have been selected and designed for high vacuum compatibility.

1.3 HR4 System Parts

A complete set for a single axis will comprise of the following:

a) HR4 Motor

b) Ceramic Driving Plate for linear applications or Ceramic Driving Ring/Disk for rotary applications (see section 2.2.1)

c) One of the following drivers:

- AB1A
- AB2
- AB4
- AB5

1.4 Handling

CAUTIONS

Do not set power-on unless the motor is mounted and preloaded!

Do not immerse the motor in any solvent or cleaning agent.

Use only a clean cloth to wipe the motor.

Be sure that the motor, and specifically the 'finger tips', are not subjected to mechanical shocks.

1.5 Installation and Servicing

It is recommended to follow the installation instructions in this guide, when mounting and installing the motor. The HR4 does not contain any user-serviceable parts.

2. Preparation and Installation

2.1 Preparation

For optimal motor performance, it is recommended to use the Ceramic driving plate provided by Nanomotion. These driving plates have been specifically designed to work with Nanomotion motors.

Substituting this plate with any other material might reduce motor performance or damage the motor.

NOTE: The instructions given in this section refer to the standard ceramic driving plates provided by Nanomotion. Nanomotion can not guarantee performance attained by plates purchased from other sources.

2.1.1 Mounting Base

Prepare the base as described in Section 3.3.3 - Mounting Base Dimensions. The base should be positioned perpendicular to the Ceramic driving plate that is bonded to the stage.

If necessary, refer to the schematic for motor dimensions.

CAUTION: *The mounting base and the method used for mounting should be designed for maximum mechanical rigidity and stiffness.*

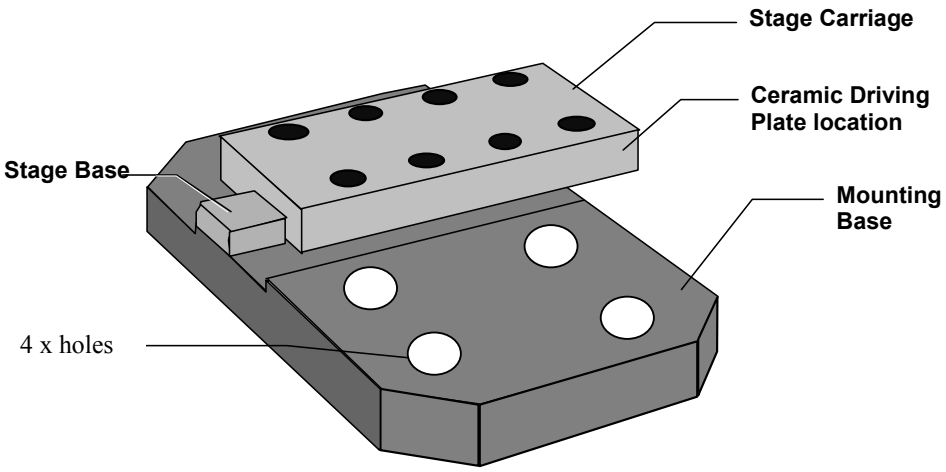

Figure 2-1: Motor Mounting Base

The mounting base dimensions diagram refers to the *front* surface of the ceramic driving plate.

For driving plate dimensions please refer to the price list.

The four screws securing the motor to the mounting surface will be inserted from its underside. Any protrusion of the screws *might* interfere with motion on another axis.

2.1.2 Limiting Stage Motion

The provided ceramic driving plate should not exceed the stage. It must be supported by a solid even backing along all its length, in order to avoid breaking when motor is pressed against it.

The Ceramic driving plate should also be at least 20 mm longer than the stage travel length, otherwise the motor finger tips might be damaged.

If the above requirements are not met, limit the stage travel distance using end stops.

2.2 Motor Installation

The installation procedure consists of:

- Bonding the Ceramic Driving plate to the stage
- Mounting the motor
- Grounding the motor
- Connecting the motor to its driver

2.2.1 Bonding the Driving Plate to the Stage

The Driving Ceramic Plate interfaces between the motor 'finger tips' and the stage, and provides the required friction.

Bond the driving plate to the stage surface interfacing with the motor 'finger tips', according to the instructions given in this section.

.

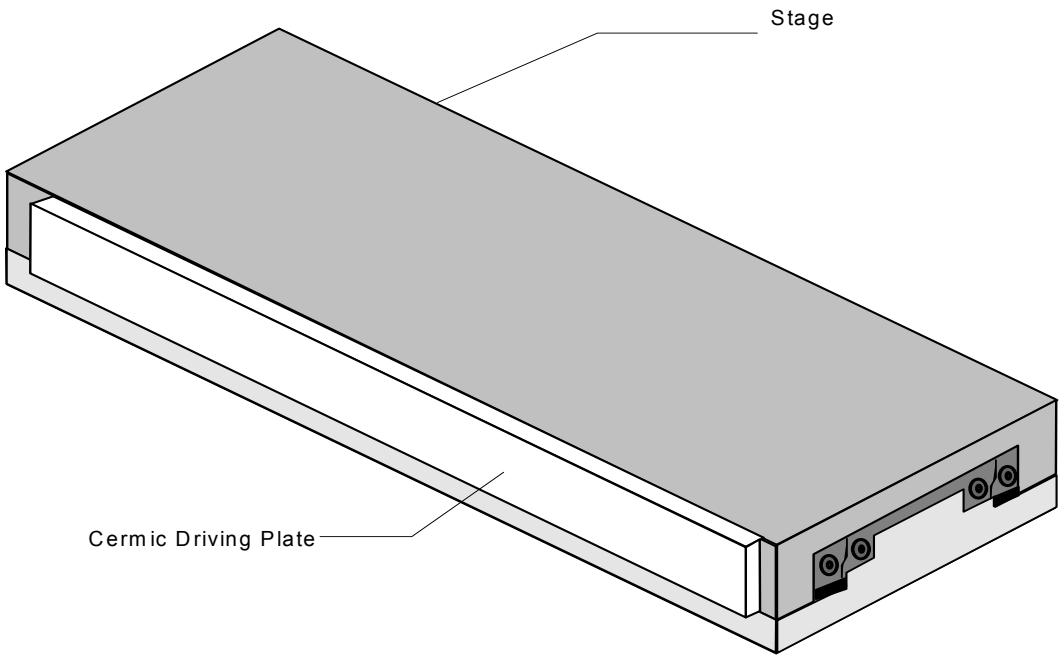

Figure 2-2: Bonding the Ceramic Driving Plate

1. Clean the bonding region on the stage, using a suitable agent such as Acetone or Methanol.
2. Peel off the self-adhesive backing paper on the Ceramic driving plate. The self adhesive tape is compatible with high-vacuum applications.
3. Referring to the figure below, place the plate in position, verifying that:
   - There is a maximum of 3.5mm between the lower edge of the Ceramic driving plate and the motor mounting surface.
   - There is a minimum of 12.0mm between the upper edge of the Ceramic driving plate and the motor mounting surface.

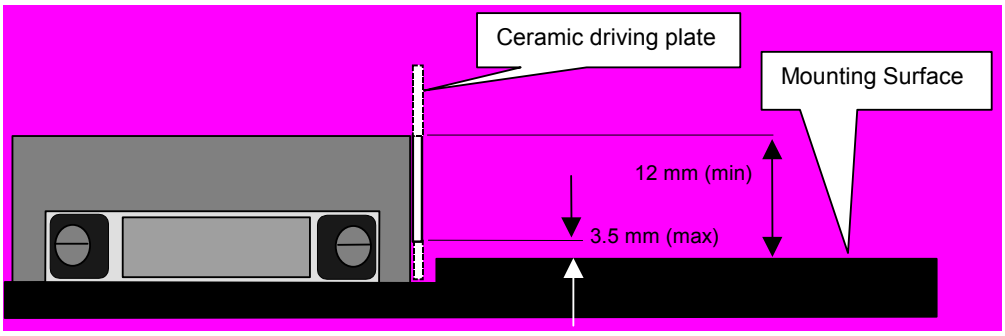

Figure 2-3: Ceramic Driving Plate Position

Continued on the following page….

4. Referring to the figure below, apply two drops of epoxy adhesive, on the center of the Ceramic driving plate *upper* surface, about 2cm apart. The Epoxy must bond between the plate and the stage.

   Recommended adhesive:

   - Emerson & Cuming ecobond 24, for vacuum applications
   - 3M 2216 epoxy or CIBA GEIGEY Arldite Radite, for non-vacuum applications

NOTE: *Be sure the epoxy contacts the upper surfaces of the plate and the stage carriage but* does not flow over *the Ceramic plate front surface.*

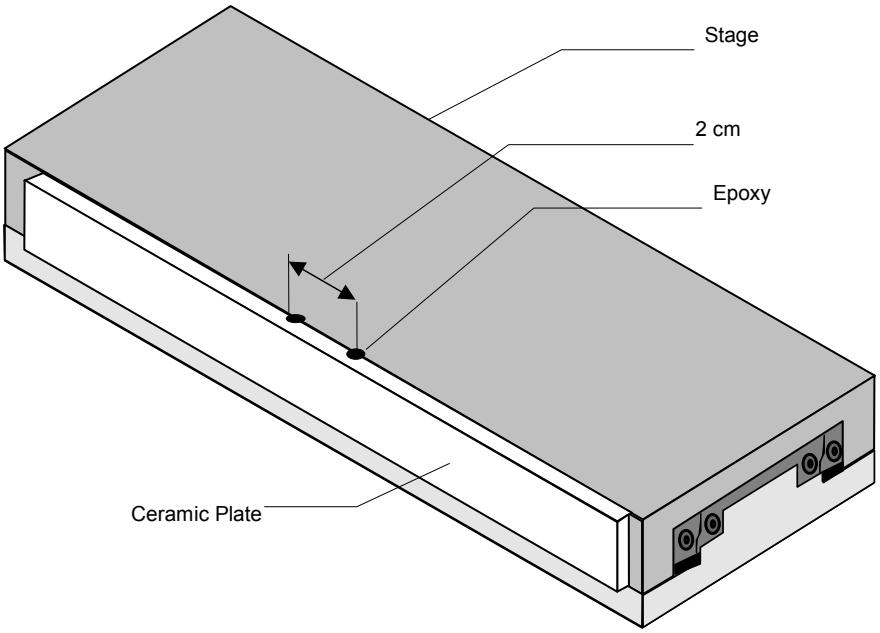

Figure 2-4: Securing the Ceramic Driving Plate to the Stage

5. Allow the required time period for curing, according to the Epoxy manufacturer specifications.
6. Mount the motor according to the following section.

2.2.2 Mounting the Motor

1. Retract the motor: using a 3mm flat screwdriver, turn both of the two preload setting screws counter-clockwise until the turn is completed and the slot is in the position illustrated below.

NOTE: the motor is usually supplied with the preload screws already retracted. If so, please continue to step 2.

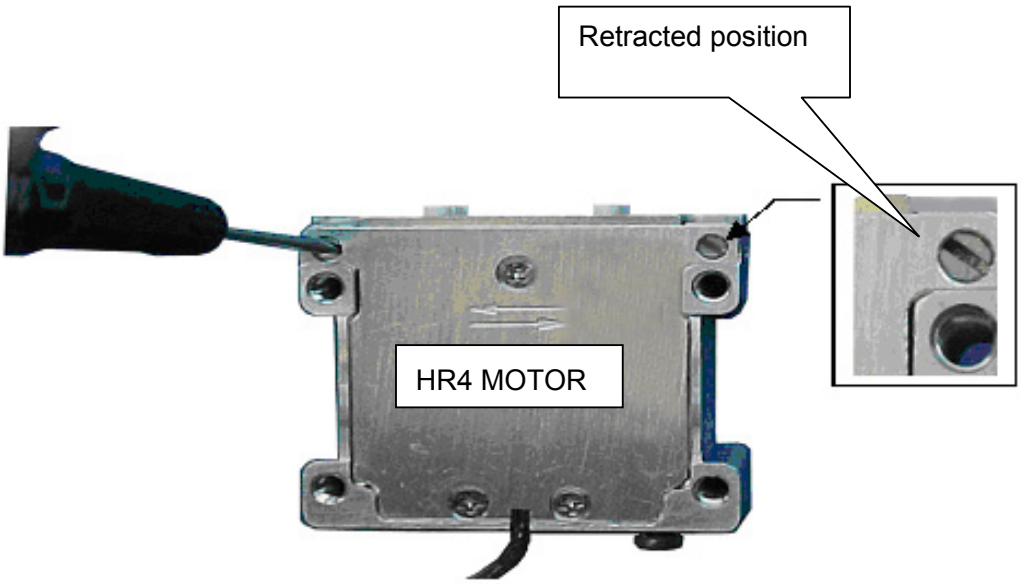

Figure 2-5: Retracted Position

Continued on the following page…

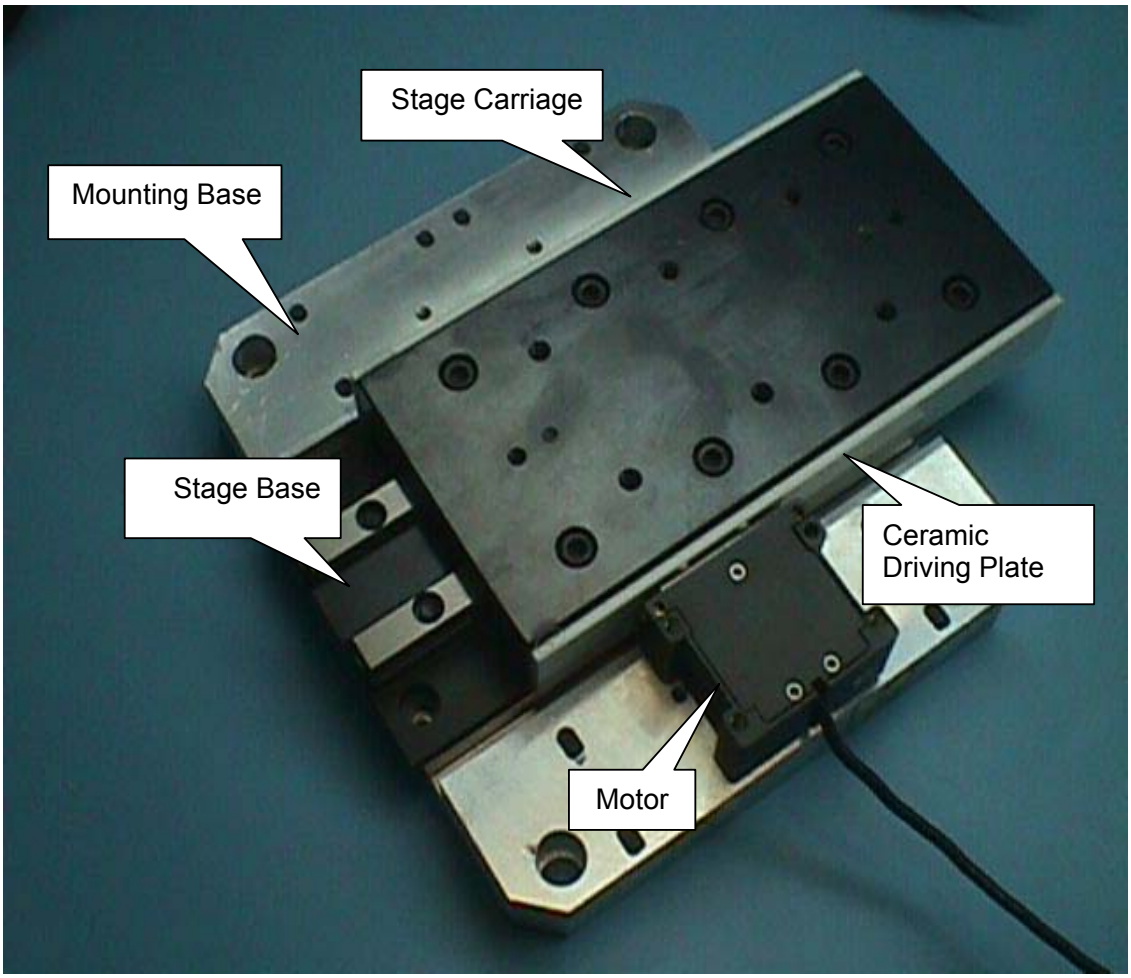

Figure 2-6: Mounting the Motor

2. While making sure not to exert any force on the fingers, place the motor on the mounting base and loosely secure it using four M4 screws and spring washers inserted from the underside of the mounting base. **Do not tighten yet.**
3. *Gently* press the motor against the ceramic driving plate, until it just contacts it and **tighten** the four screws of Step-2 at a torque of 0.5 - 0.7 Nm.

4. Release the preload setting screws: using again the 3mm flat screwdriver, turn both screws *clockwise* until the turn is completed and the slot is in the position illustrated below. The motor is now correctly mounted against the ceramic drive plate.

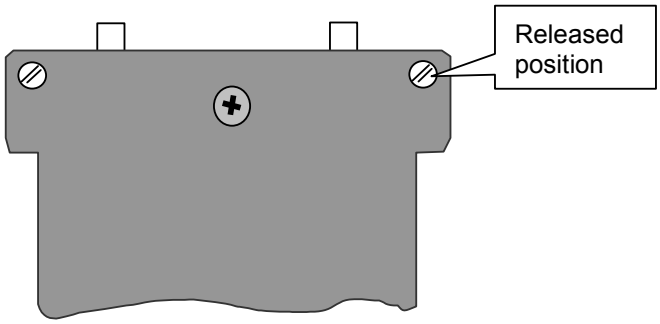

Figure 2-7: Released Position

5. Ground the motor according to the following section.

2.2.3 Motor Grounding

⚠ ***Warning !!!***

Be sure to ground the motor to the electrical network ground (according to the following instructions) before operating the motor.

1. Prepare a grounding wire and terminal connection with the following specifications:
   - Terminal diameter - for an M3 screw
   - Wire diameter - minimum 18 AWG
   - Wire length - maximum of 2 meter
2. Open the motor ground screw (figures 3-5 & 3-6) and connect the Ground connection prepared in step-1.
3. Secure the terminal between the two lock washers.
4. Connect the other end of this cable to the electrical network ground.
5. Connect the motor to its driver according to the instructions given in the following section.

2.2.4 Motor Connections

This section describes the motor connector pinout and the connections to each of the available drivers. Make sure the driver is set to operate with the HR4 motor series.

CAUTIONS:

Reducing the length of the supplied motor cable may damage *the motor. Do not attempt to shorten the cable without prior confirmation by Nanomotion.*

Extending the motor cable will not damage the motor, however it will affect its performance.

2.2.4.1 Motor Connector Pinout

⚠ ***WARNING: Do not remove the cover of the motor or disassemble its connector. High voltage inside.***

CAUTION: *Do not set power-on unless the motor is mounted and preloaded.*

The motor driver connection is a standard 9 contacts D-type female connector whose pinout is given below.

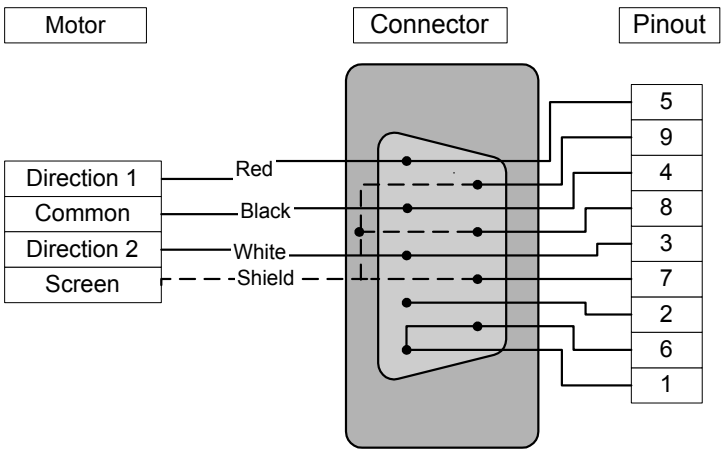

Figure 2-8: Motor Connector

NOTE: *Pins 6 and 1 on the motor connector are shorted . This is done for safety reasons – driver voltage is disabled unless pins 1 & 6 are shorted when motor is connected.*

For Ultra High Vacuum motor:

The HR4 –1-U motor does not have an outlet cable or a connector. Instead, there are 3 TFE jacketed wires extending outside the motor: 1 black wire, 1 red and 1 white wire. The red and white wires are direction 1 and 2 respectively, and the black wire is the common. Also, the safety shorting between pins 1 and 6 is not implemented and should be preformed by the user.

> ⚠ ***WARNING***
>
> ***Since there is no cable shielding the HR4-1-U motor case to the ground, it must be grounded by means of connection to the network ground. Please refer to section 2.2.3 in the manual for detailed instructions.***

2.2.4.2 System Electrical Configuration

The Motor is to be operated by one of Nanomotion's drivers.

Following is the two possible configurations:

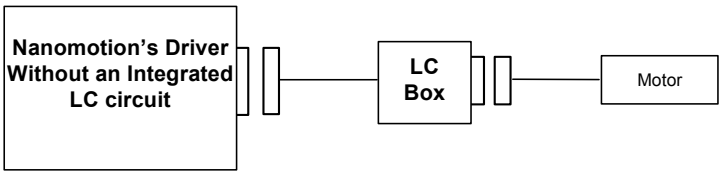

Figure 2-9: Connection to a driver using an external LC box

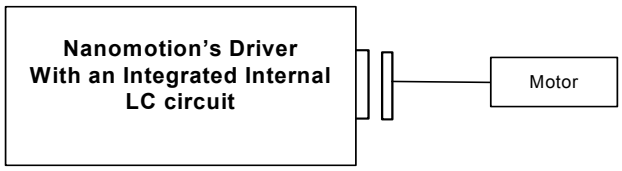

Figure 2-10: Connection to a Driver with internal LC circuit

2.2.5 Motor Run-In

Run-in of the motor is important to reduce wear rate of the system and to increase its lifetime.

The required run-in conditions are as follows:

- velocity - 100 mm/sec.
- Duty cycle - 50%.
- Duration - 4 hours.

When the run–in is completed, carefully clean the ceramic strip with a Q-Tip soaked with IPA, **without dismounting the motor**.

General remarks:

1. The procedure should be repeated if the motor is disconnected and then reinstalled.
2. **Do not perform run-in in a vacuum environment**.

3. Specifications

3.1 General

These specifications apply to the standard motor driven by the AB1A Driver Box. The motor features a linear voltage response. The motor and driver can be modeled as a DC-motor with friction driven by a voltage amplifier, as illustrated in the following diagram.
.

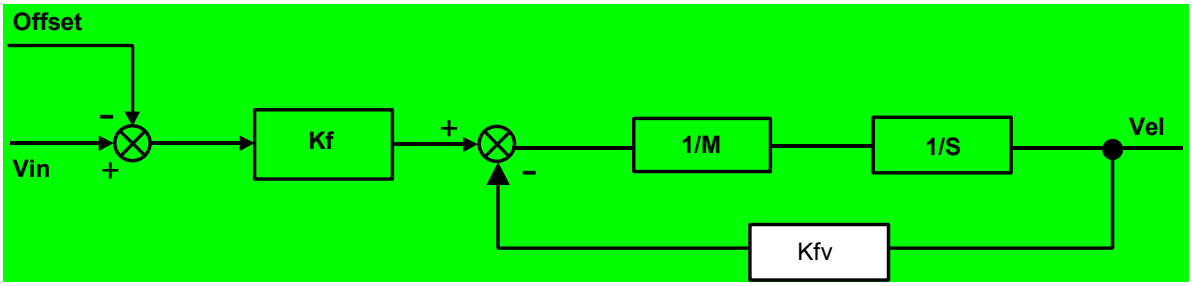

Figure 3-1: Block Diagram of the Motor and Driver

Where:

Vin - Command to the driver -10 to +10 [V]

Kf - Force constant [N/V]

Offset - Starting voltage [V]

Kfv - Velocity damping factor
(similar to back EMF) [N x sec / m]

Vel - Motor velocity [m/Sec]

M - Moving mass [kg]

S - Laplace variable [1/sec]

A block diagram of a typical HR4 Driver/Motor Sub-system is shown below.

A command voltage of ±10V is applied to the driver. The driver then generates a 39.6Khz sine wave (V motor) whose amplitude is a function of command voltage. The sine wave drives the HR4 motor.

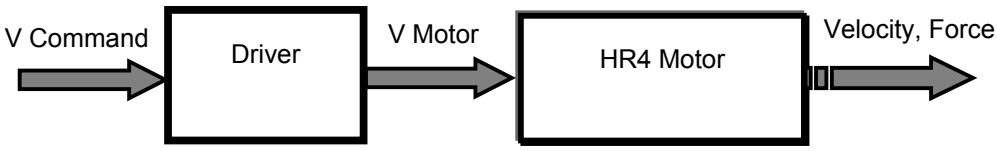

Figure 3-2: Block Diagram of a typical HR4 Driver/Motor Sub-system

3.2 Specification Parameters

3.2.1 Performance

Maximum Allowable Velocity:	250 [mm/sec]
Dynamic Stall Force:	15 to 18 [N]
Static Holding Force	14 [N] (reference value)
Non-Energized Stiffness	2.3 to 2.8 [N/μ]
Nominal Preload on Stage	72 [N]
Kf	2 to 4 [N/Volt] - driver & command dependant
Kfv	60 to 72 [N • sec/m]
Offset	1 to 2 [V] – driver dependant
Attainable Resolution	Better than 100nm – see application notes.
Nominal Lifetime	20,000 hours under nominal operating conditions

3.2.2 Electrical

Maximal Voltage:	270Vrms, 39.6KHz, sine wave.
Maximal Current consumption:	320 mA rms
Maximal Power Consumption:	15W

3.2.3 Environmental

Ambient Temperature:	0 - 50°C
Storage:	-40°C - +70°C
Humidity:	0 - 80% non condensing
Vacuum level (high-vacuum motors):	10^{-7} Torr (guaranteed only after baking)
Vacuum level (ultra-high-vacuum motors):	10^{-10} Torr (guaranteed only after baking)
Maximum Baking Temperature (for vacuum motors):	120ºC (140ºC for ultra high vacuum motor)

3.2.4 Physical Dimensions

Length:	42mm
Width:	46.6mm
Height:	15mm
Weight:	73 gr.

3.2.5 Performance Envelope with the AB5 driver

Due to the AB5's unique features, the EOP of the motor, when being driven by it, is significantly different than with all other Nanomotion drivers.

In order to avoid damaging the motor, it is important to adhere to the EOP as depicted in the following graph and table.

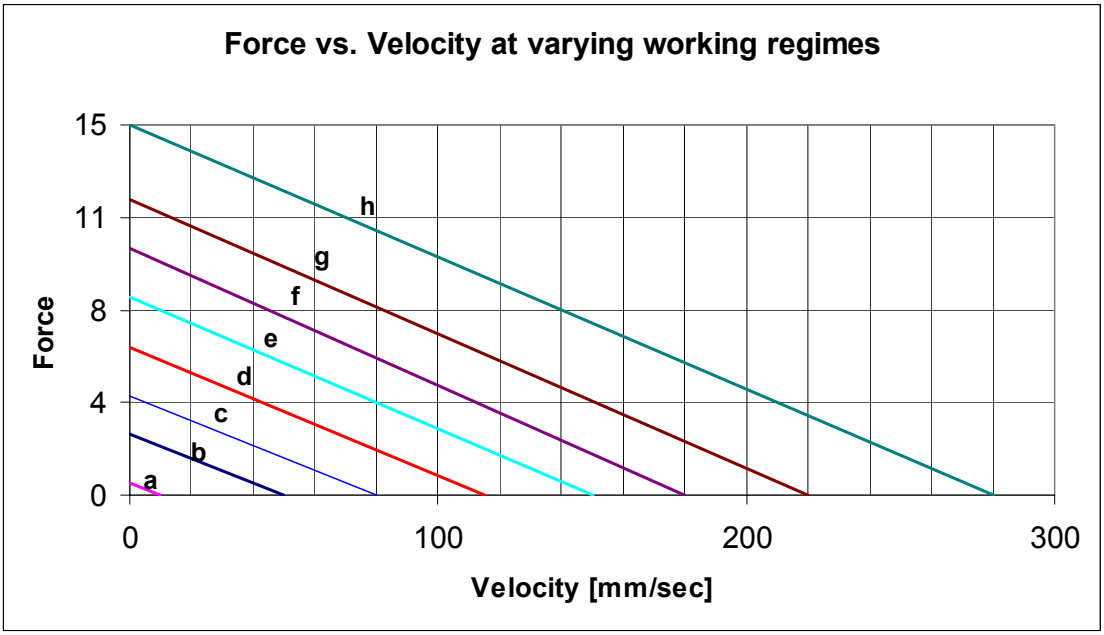

	Duty Cycle [%]			Max Continuous Operation time [sec]	
Curve	Ambient 25°C Break Off	Ambient 25°C Break On	Vacuum Break On	Ambient - 25°C	Vacuum
a	100	100	56	unlimited	500
b	100	100	54	unlimited	450
c	100	100	45	unlimited	280
d	100	100	33	unlimited	170
e	99	99	23	unlimited	100
f	53	58	15	170	66
g	33	48	11	77	44
h	17	28	6.5	32	25

Figure 3-3: EOP with AB5

As described in the AB5's manual, when operating it in the Brake Off mode, the motor consumes power at all times, even when the control command voltage is zero, thereby reducing the thermal EOP.

If Break Off mode is desired while working in vacuum, the following operating regime must be maintained: within the specific duty cycle stated in the chart, once the "maximal continuous operation time" has elapsed, the motor must be disabled and allowed to cool off for at least 400 seconds.

For example, looking at curve C, in vacuum, with the break off: after 280 seconds of working at the 45% duty cycle specified, the motor must be disabled for at least 400 seconds to cool off. This is true also if a smaller duty cycle is maintained.

3.2.6 Performance Envelope with the AB1A, AB2, AB4 drivers

The following graph illustrates motor velocity as a function of the applied driver command voltage. Allowing up to 30 mm/sec variations, use it as a reference and as a guideline for expected motor performance,

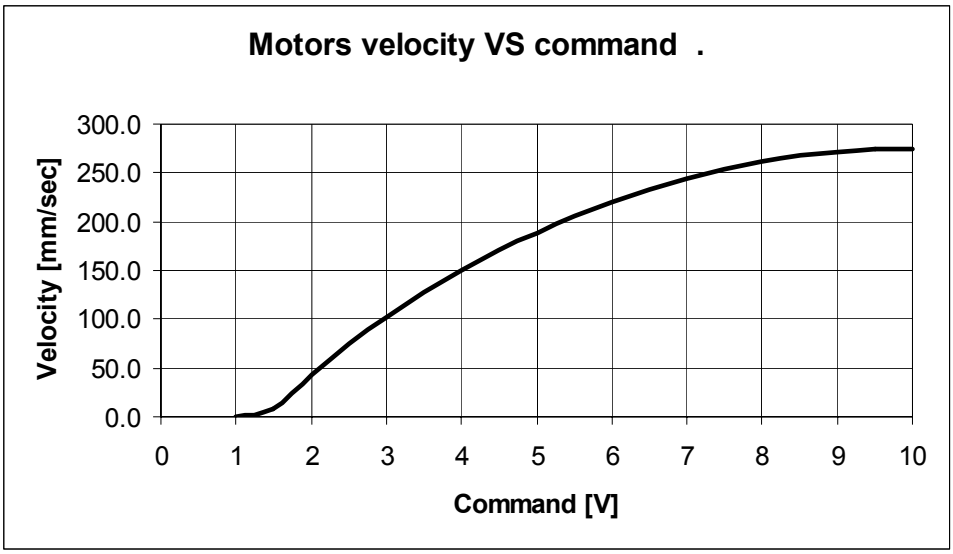

Figure 3-4: Motor Velocity vs. Command [1]

[1] The motor operates horizontally at room temperature and low duty cycle (< 10%). It interfaces an Ceramic Strip (according to Nanomotion Specifications) and a cross-roller high quality slide.

The following graph and table are designed to help the user determine the correct performance envelope of operation so as to not overheat and damage the motor.

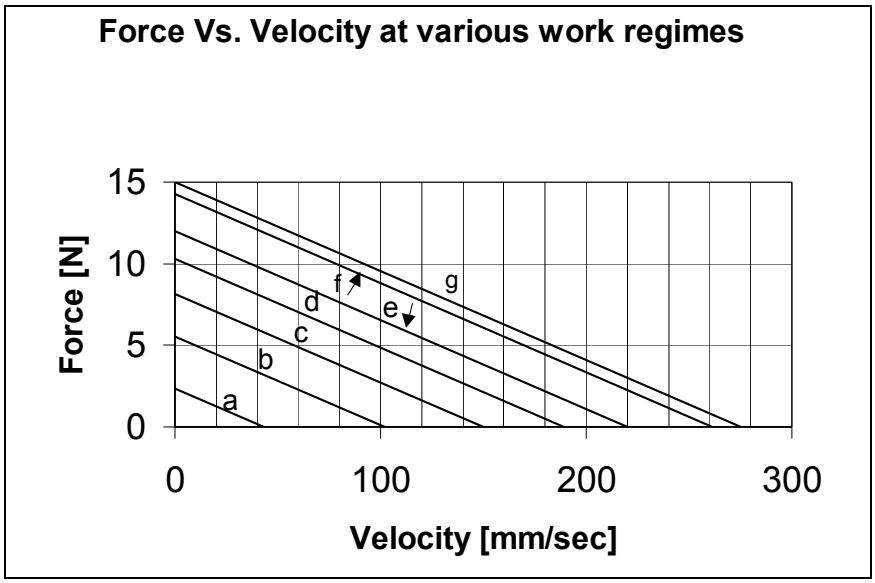

	25 ^0C		50 ^0C		Vacuum	
Curve	Duty Cycle	max.continuous operation time	Duty Cycle	max.continuous operation time	Duty Cycle	max.continuous operation time
a	100%	-	100%	-	100%	-
b	100%	-	100%	-	44%	184
c	100%	-	92%	137	26%	107
d	100%	-	62%	93	17%	72
e	78%	87 seconds	47%	70	13%	55
f	56%	62 seconds	33%	50	9%	39
g	50%	56 seconds	30%	45	8%	35

Figure 3-5: Performance envelope at various work regimes

How to define a performance envelope

An example for using the graph and table:

A *vacuum* application requires *5N* at a velocity of *100mm/sec*. The graph shows that this point of operation corresponds to curve "*d*".

The table shows that curve "d" and a vacuum environment require that a duty cycle of 17% will not be exeeded while maintaining a maximum continuous operation time of 72 seconds.

Vacuum application note – Heat dissipation mechanism is by radiation to the motor case and by conduction through the fingers. Hence, the motor and the ceramic drive strip bases, must both be thermaly designed to dissipate 1W each (per motor), with a temperature rise of 15°C maximum. Also, the temperature of all parts in contact with the motor and with the ceramic drive strip, should not exeed 40°C.

3.3 Schematics

3.3.1 Dimensions for Standard and High-Vacuum Motors

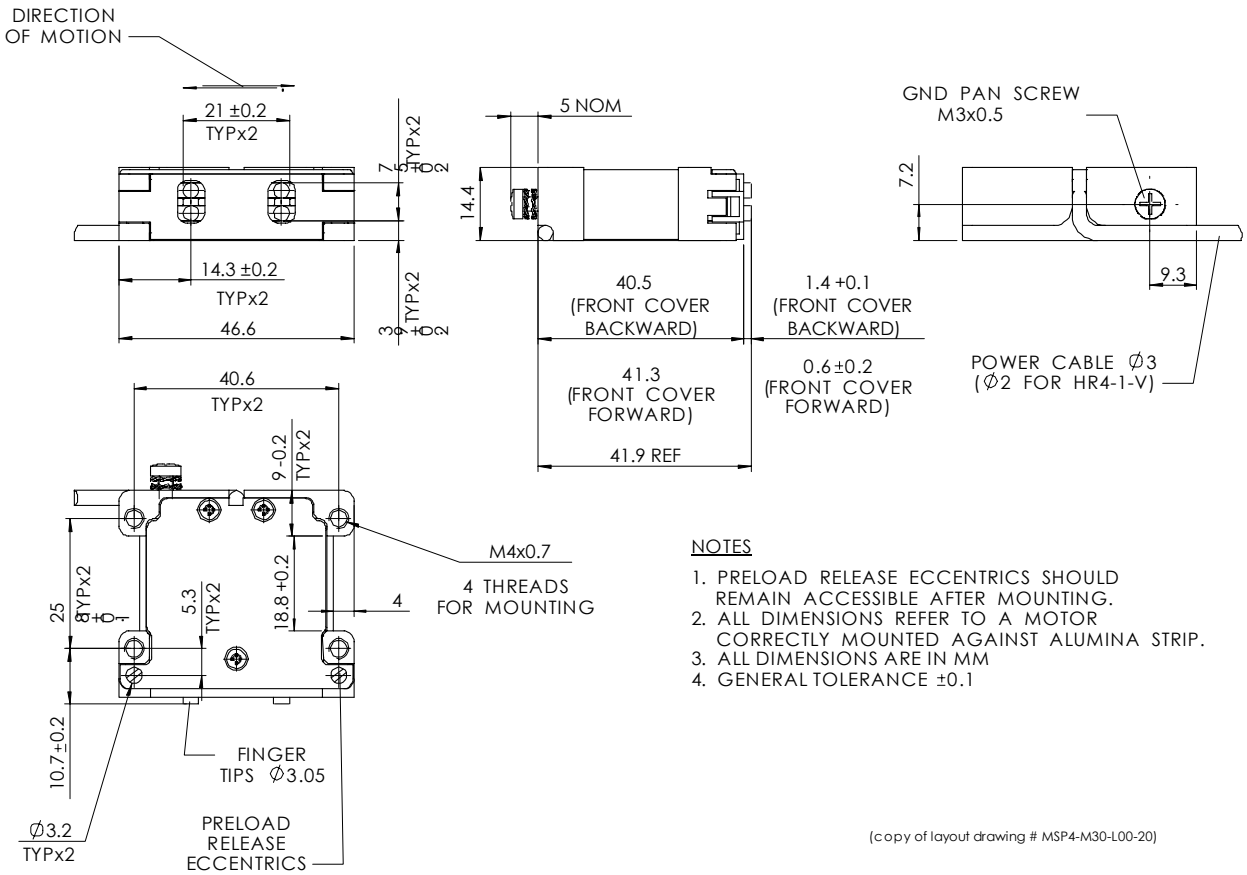

Figure 3-6: Dimensions for Standard and High-Vacuum Motors

3.3.2 Dimensions for Ultra-High-Vacuum Motors

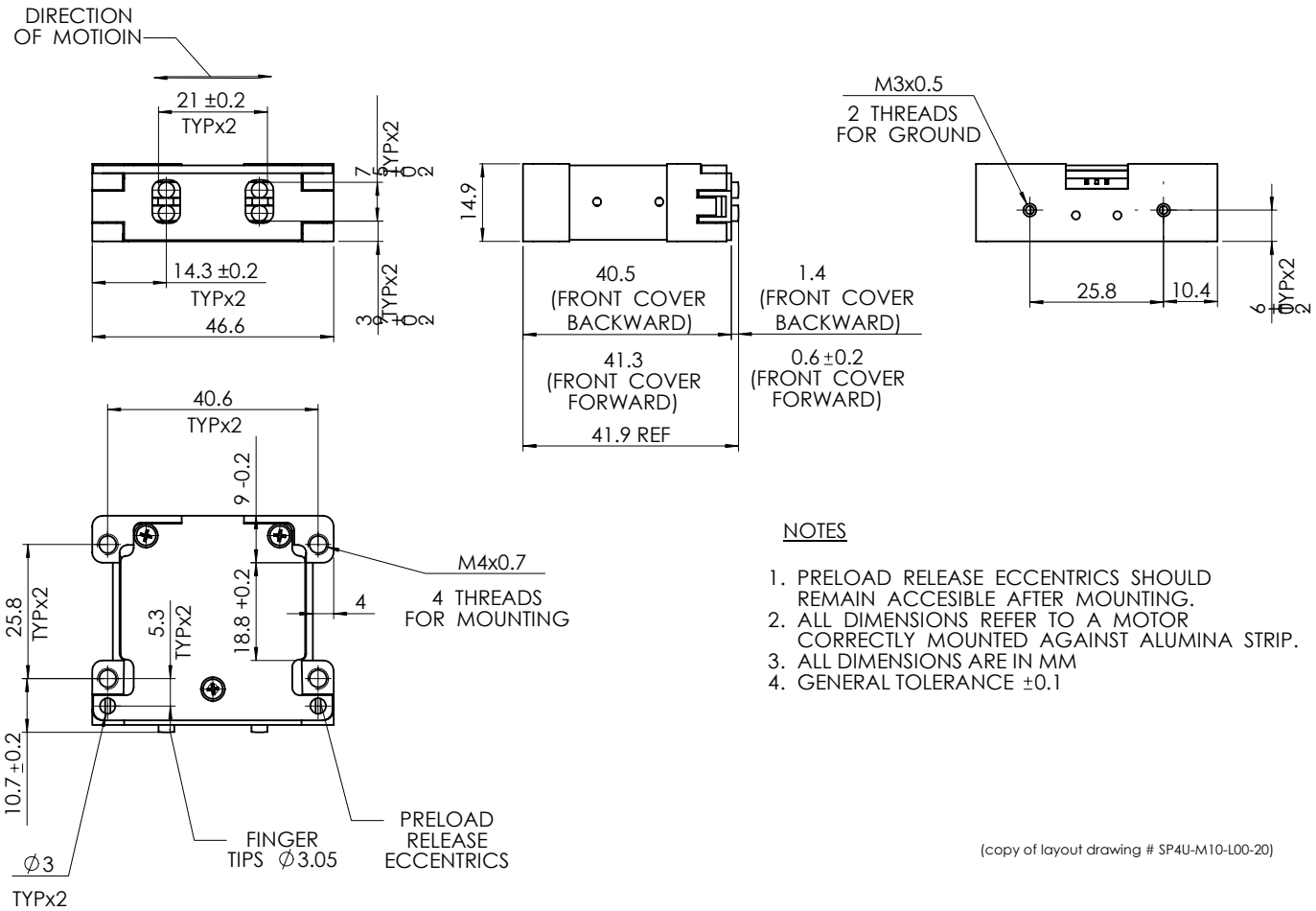

Figure 3-7: Dimensions for Ultra-High-Vacuum Motors

3.3.3 Mounting Base Dimensions

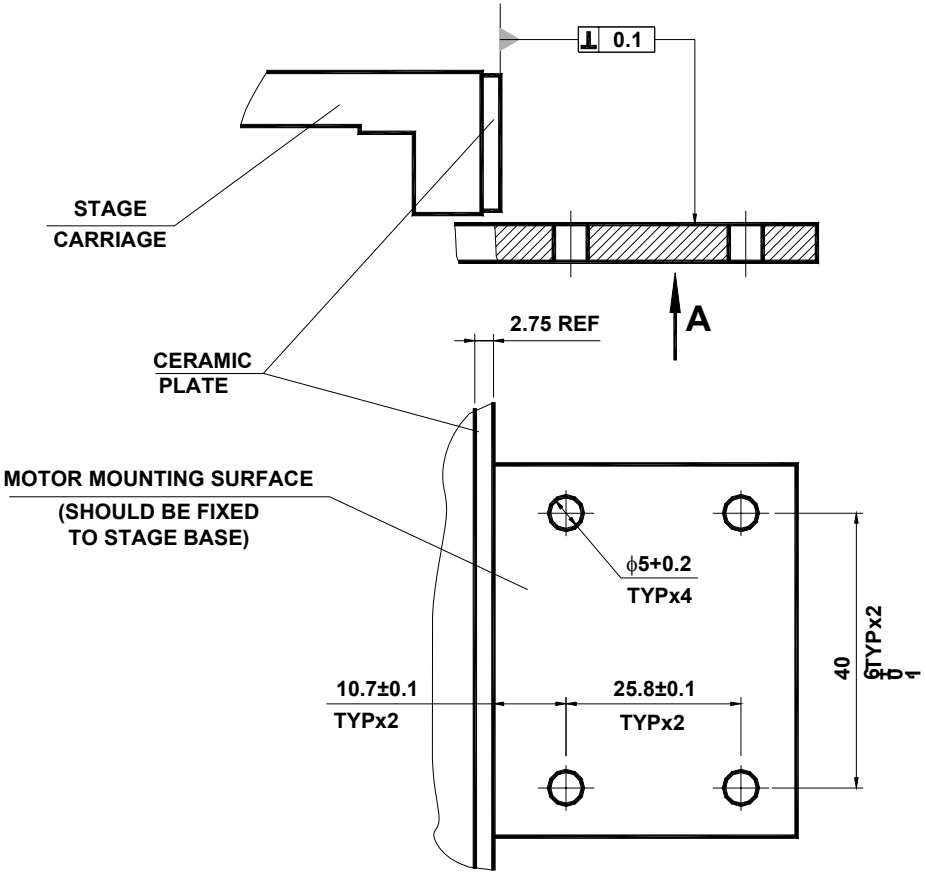

Figure 3-8: Base Layout