TABLE 1	C131	C132	C133
DIM 'A'	9.11 [231.4]	11.83 [300.5]	14.55 [369.6]
DIM 'B'	7.520 [191.01]	10.240 [260.10]	12.960 [329.18]
DIM 'C'	6.460 [164.08]	9.180 [233.17]	11.900 [302.26]
DIM 'D'	4.140 [105.16]	6.860 [174.24]	9.580 [243.33]
DIM 'E'	3.14 [79.8]	5.34 [135.6]	8.71 [221.2]
DIM 'F'	5.20 [132.1]	5.20 [132.1]	6.46 [164.1]
DIM 'G'	6.01 [152.7]	6.01 [152.7]	6.46 [164.1]
DIM 'H'	3.69 [93.7]	5.04 [128.0]	6.50 [165.1]
DIM 'J'	2.65 [67.3]	3.94 [100.1]	6.70 [170.2]
DIM 'K'	1.52 [38.6]	1.96 [49.8]	3.97 [100.8]

TABLE 2	C131	C132	C133
DIM 'M'	.37 [9.4]	.75 [19.1]	1.60 [40.6]
DIM 'N'	1.590 [40.39]	3.300 [83.82]	4.670 [118.62]
DIM 'P'	1.08 [27.4]	1.71 [43.4]	2.26 [57.4]
DIM 'Q'	.787 [19.99]	1.417 [35.99]	1.969 [50.01]
DIM 'R'	4.490 [114.05]	6.610 [167.89]	9.980 [253.49]

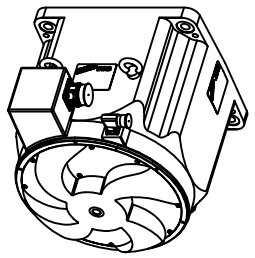

C133 MODEL
SCALE 0.150

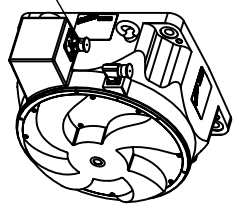

C131 MODEL
SCALE 0.150

POWER CONNECTOR INTERCONTEC BEGA125NN00000005000 OR EQUIVALENT ON MOTORS WITH CONTINUOUS CURRENT RATING <=20A RMS

UNLESS OTHERWISE SPECIFIED REMOVE ALL BURRS AND BREAK ALL SHARP EDGES	UNLESS OTHERWISE SPECIFIED ANG. DIM. ± 1 DEGREE XX DEC PLACES ± .015[.38] XXX DEC PLACES ± .005[.127]	DO NOT SCALE DWG. USE DIMENSIONS ONLY. ALL DIMENSIONS ARE INCHES [MILLIMETERS] UNLESS OTHERWISE SPECIFIED	DWG NO. D-926193	ISSUE A

NOTES:
1. MOTOR MEETS IP65 SEALING WHEN KOLLMORGEN APPROVED MATING PLUGS ARE USED AND CUSTOMER MOUNTING INTERFACE IS SEALED.
2. SHAFT KEY PROVIDED WITH MOTOR.
3. ROTATION WILL BE C.W. WHEN FACING MOTOR MOUNTING FACE WITH PHASE SEQUENCE A, C, B.

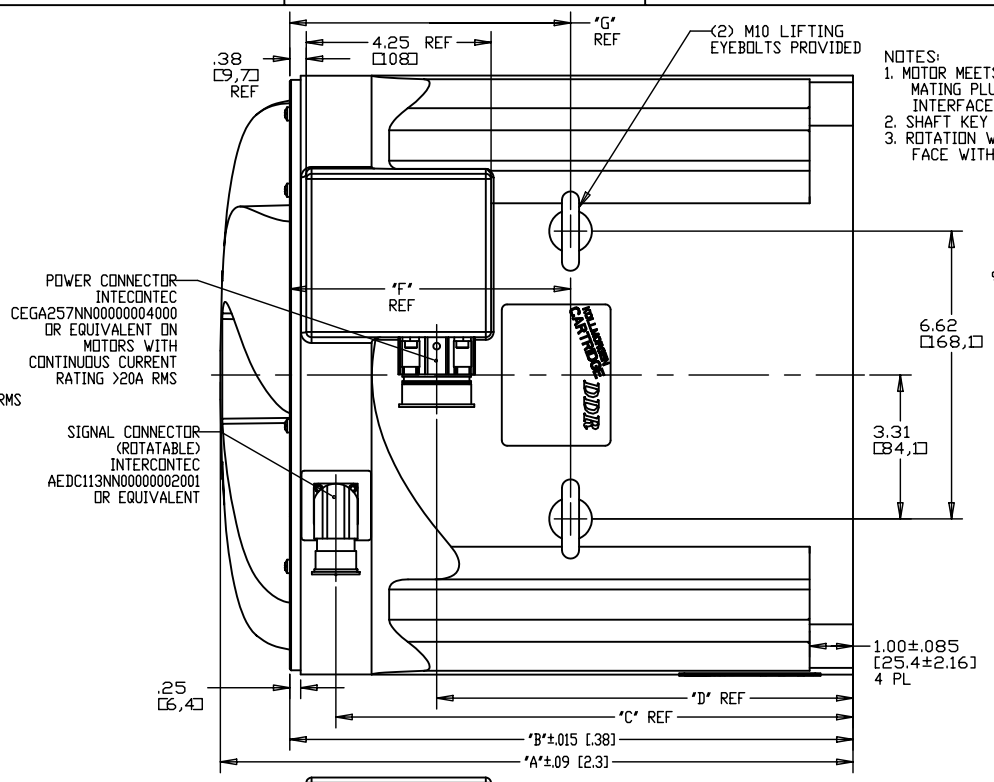

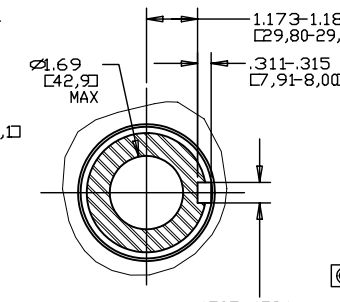

SECTION D-D

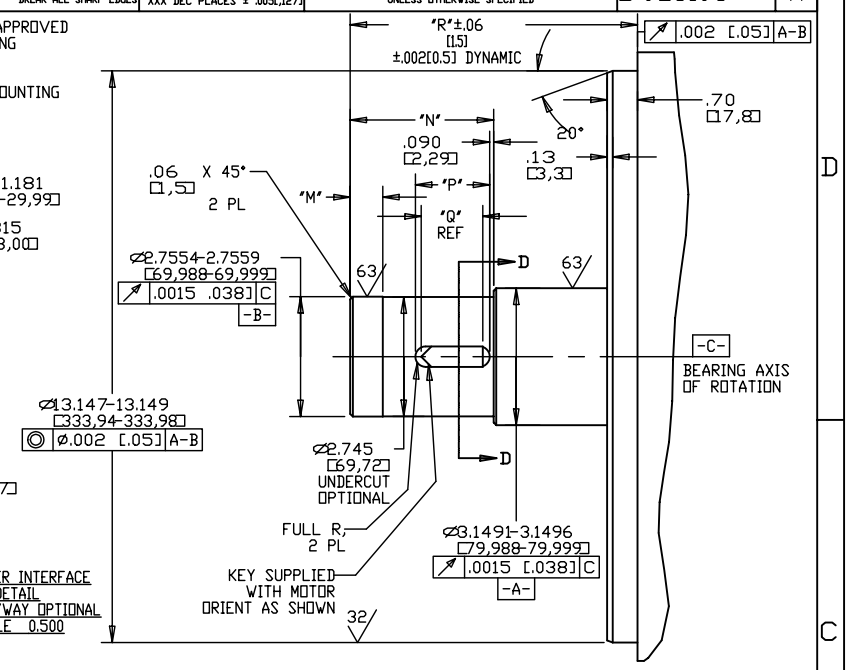

CUSTOMER INTERFACE DETAIL
NOTE: KEYWAY OPTIONAL
SCALE 0.500

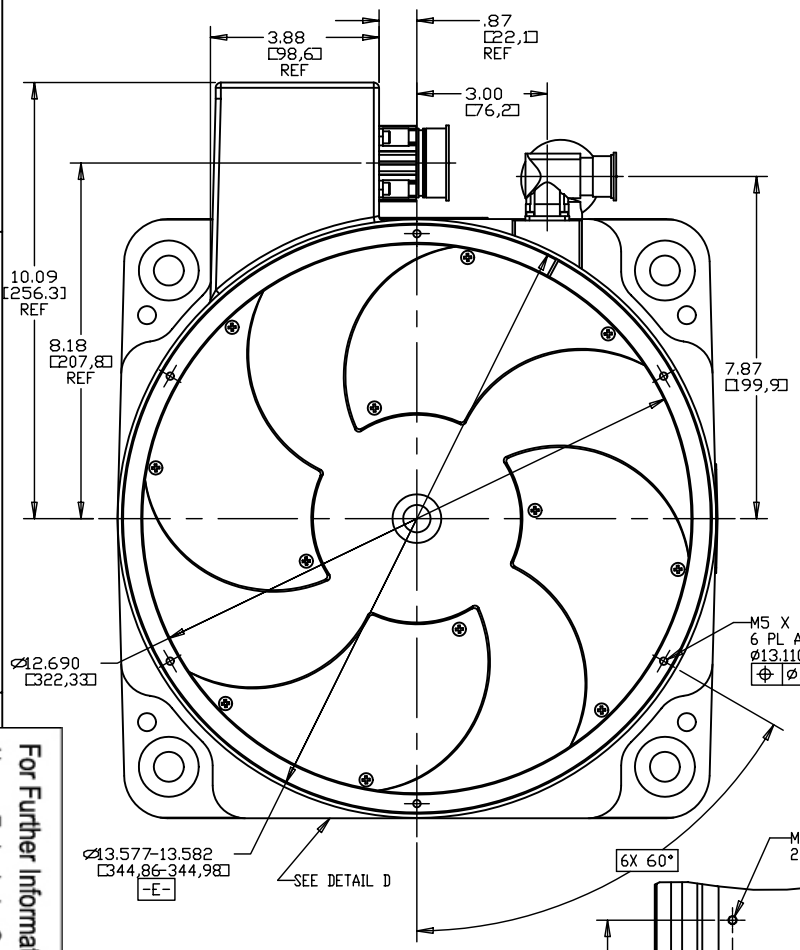

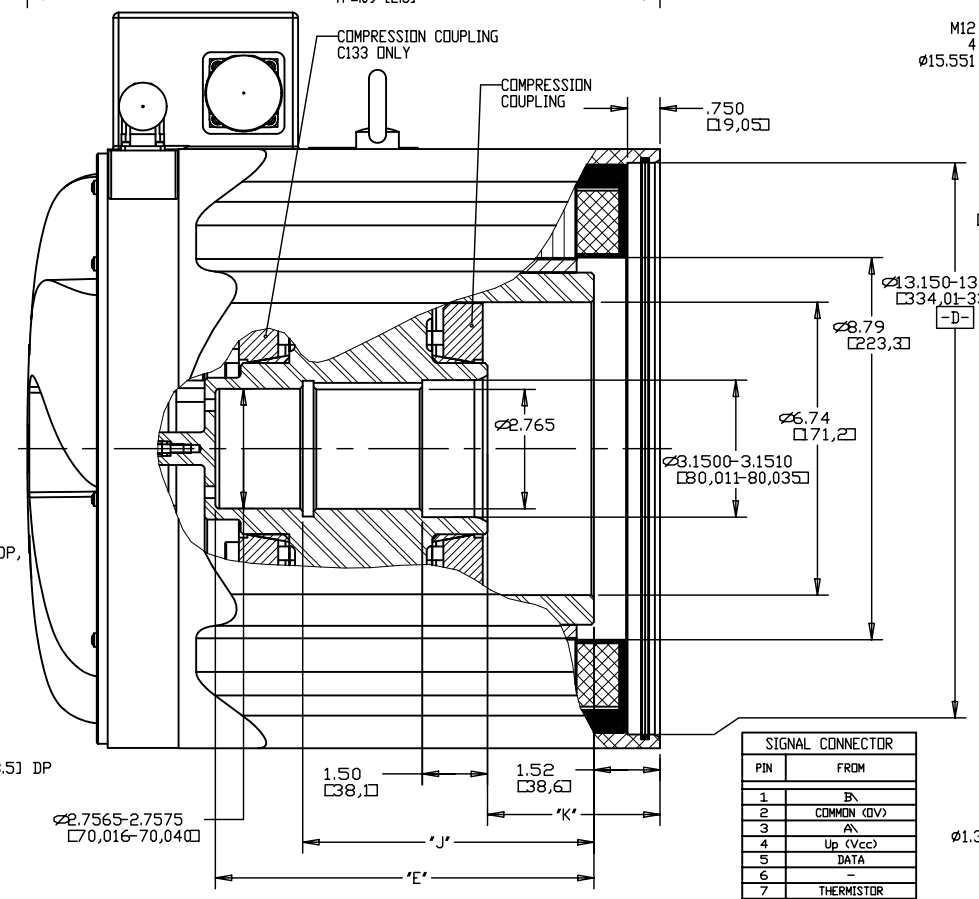

SECTION A-A

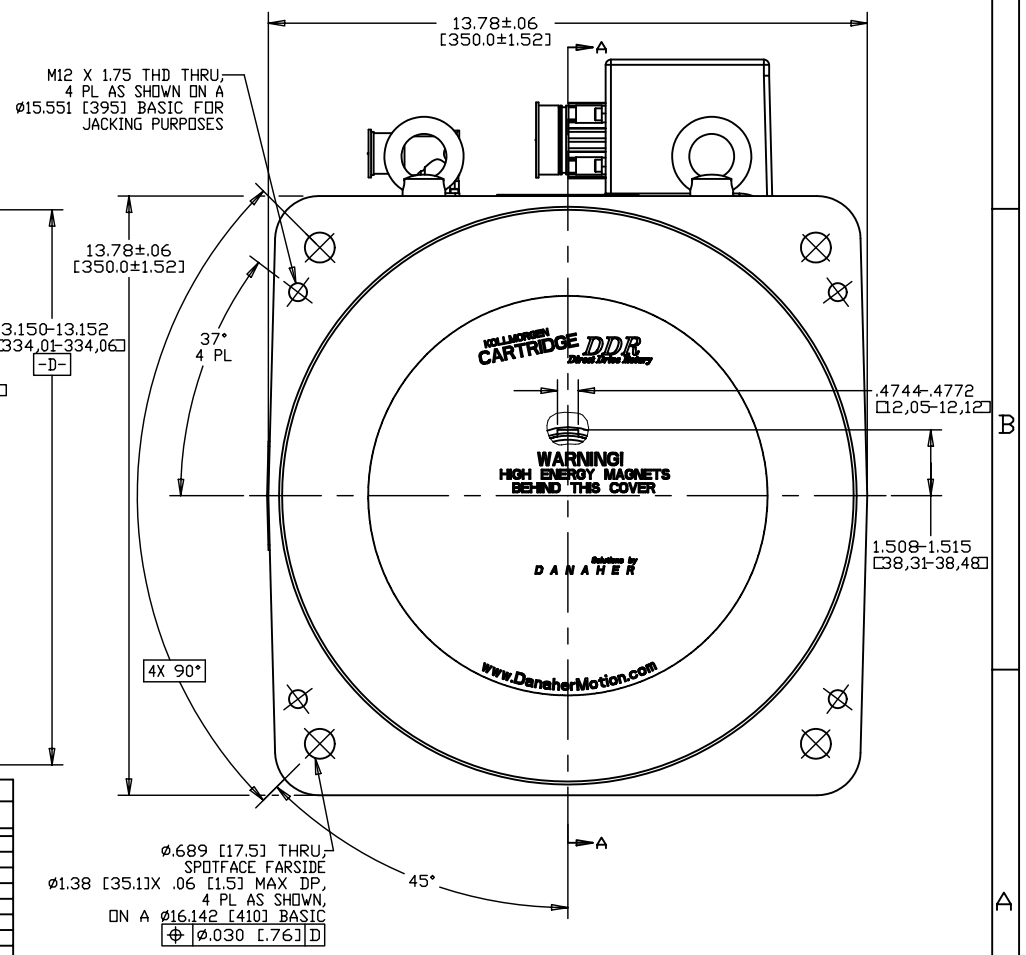

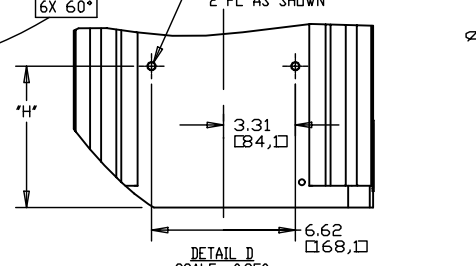

DETAIL D
SCALE 0.250
BOTTOM VIEW

SIGNAL CONNECTOR	
PIN	FROM
1	B\
2	COMMON (0V)
3	A\
4	Up (Vcc)
5	DATA
6	–
7	THERMISTOR
8	CLOCK
9	B
10	COMMON (0V Sense)
11	A
12	Up Sense (Vcc Sense)
13	DATA\
14	THERMISTOR
15	CLOCK\
16	–
17	–

POWER CONNECTOR	
PIN	FROM
1 OR U	PHASE 'C'
2 OR GND	CASE GROUND
3 OR V	PHASE 'A'
4 OR V	PHASE 'B'
1,2,3,4,+,–	NOT CONNECTED

del File Rev	A
del File	C133_ASSY_ECN1313_HANDWOUND
awing File	926193
pe	ASSEM

L COPY CODE

MATERIAL: – FINISH: –

ISS	ECN NO.	DATE	APP'D	ISS	ECN NO.	DATE	APP'D	ISS	ECN NO.	DATE	APP'D

DWN BY: KLR DATE 31-Oct-03
CHK BY: DATE
APP'D BY: DATE
JOB NO.
CROSS REF NO.

Kollmorgen Industrial Drives
RADFORD, VIRGINA

OUTLINE
CX13XX-11-2105

SCALE 0.500 | DWG NO. D-926193 | SHEET 1 OF 1 | ISSUE A

For Further Information Contact ....
Heason Technologies Group Ltd
Tel: +44(0)1403 755800
Fax: +44(0)1403 755810
Email: sales@heason.com
Freephone 0800 374903 www.heason.com
Heason Technologies Group